KARER

TECHNICAL BROCHURE

UT 50

UNDERGROUND TRUCK

25 M^3 DUMP BOX VOLUME, 50 TONS PAYLOAD CAPACITY



KARER UT 50 is an articulated underground mining truck with a 50-ton carrying capacity. It has innovative features that can easily handle harsh working conditions, providing powerful power, strength and reliability to help you maximize your productivity.

The heavy-duty frame is designed to cope with harsh underground environments. The central articulation uses a 100% maintenance-free, fully sealed swivel joint to reduce downtime, lower operating costs, and ensure that the front and rear frames can swing freely to form good contact with the ground under harsh working conditions.

Adopt Euro 3 or optional Stage V (Euro 5) VOLVO PENTA (Sweden) engine, which has quick response, excellent efficiency and excellent service life.

The automatic shifting ALLISON gearbox provides unparalleled transmission efficiency and controllability. The transmission is durable, has a long service life and is equipped with a lock-up.

All four wheels with KESSLER (Germany) are equipped with spring-loaded, hydraulically released normally closed wet multi-disc brakes, which, combined with an automatically controlled hydraulic retarder to assist braking, give the vehicle excellent braking performance.

The ROPS/FOPS certified cab can be equipped with cooling and heating air conditioning systems, an ergonomically designed operating table, and adjustable suspension that meets the product vibration level, allowing the operator to control the equipment more effectively in a safe, comfortable and efficient environment.

The electromechanical and hydraulic integrated control system monitors all equipment parameters in real time to ensure human and machine safety. The cabin allows for quick viewing of various information and provides fault diagnosis.

CAPACITIES	
Standard Dump Box	25 m^3
Payload	50.000 kg
Max Climbing Grade	14°
Dumping Angle	62°
Oscillation	8°

DIMENSIONS	
Length*Width*Height (cm)	1146*315*320
Min. Ground Clearance	46 cm

SPEEDS	
Speed (1st Gear) (Front)	6.7 km/h
Speed (2nd Gear) (Front)	9.9 km/h
Speed (3rd Gear) (Front)	13.3 km/h
Speed (4th Gear) (Front)	19.8 km/h
Speed (5th Gear) (Front)	26.7 km/h
Speed (6th Gear) (Front)	39.8 km/h
Speed (1th Gear) (Reverse)	4.8 km/h
Speed (2th Gear) (Reverse)	8.5 km/h

WEIGHTS	
Operating Weight	49,000 kg
Loaded Weight	99,000 kg
Front Axle (Unloaded)	32,500 kg
Rear Axle (Unloaded)	16,500 kg
Front Axle (Loaded)	42,000 kg
Rear Axle (Loaded)	57,000 kg

*Truck weight depends on options selected

TRANSMISSION	
Torque Converter and Transmission	
Brand	ALLISON
Model	6625
Automatic transmission with torque converter lock-up function	
Hydraulic retarder function	
Features	6 forward speed gear and 2 reverse speed gear

AXLES	
Brand	Kessler (Germany)
Front Axle Oscillation	Model: D106 SAHR Standard
Rear Axle Fixed	

BRAKES
It adopts spring brake, fully enclosed multi-disc wet brake
It integrates service brake, parking brake and emergency brake
It has two independent pipeline controls, one for the front axle and the other for the rear axle
Automatic brake activation system
Manual emergency brake release pump is standard. In case of engine stoppage, truck can be easily withdrawn from underground



ENGINE	
Model	VOLVO TWD 1683 VE
Power	585kW(784Hp)@1900rpm
Max. Torque	3650Nm@1200rpm
Cylinder	In Line 6
Electric	24 V
Control System	Electronic fuel injection system
Cooling	Water-cooled engine
Starter	24 V starter motor
Emission	Stage V (Euro 5)
Air Intake	Turbocharged Dry air filtration Prefiltration Two-stage filtration
Exhaust System	Ultra-low sulphur fuel and AdBlue
Average Fuel Consumption	45 L/h

TANK CAPASITIES	
Fuel Tank	700 liters
Dump Box Hydraulic Oil Tank	250 liters
Brake Hydraulic Oil Tank	100 liters

ELECTRIC	
Battery	2 * 12V, 165 Ah
Starter	7 kW / 24 V
Dynamo	28 V, 150 A
Dual power main switch is standard with locking	
Horn/Back-up siren is standard	
Flashing warning lights are standard	
Parking/ brake indicator lights are standard	
Control System	Programmable
	Built-in diagnostic system
	Vehicle fault self-diagnosis system
	Engine fault diagnosis system
	Transmission fault diagnosis system
	Electronic limit function for steering, dump box lifting and lowering
	Automatic parking/stop function
	Fire extinguishing activated automatic power off function
	Automatic hydraulic retarding function
	Industrial patented antirollover function
	7” color display
Camera System	1 pc camera on the rear
	1 pc monitor in the cabin
Horn	1 pc in front 1 pc at rear
Driving Lights	
Front	2 pcs LED
Rear	3 pcs LED
Cabin	3 pcs LED
Brake Lights (at Rear)	2 pcs LED
Turning signal	2 pcs on the front 2 pcs on the rear
Red and Green Indicator Lights	2 pcs on the front 2 pcs on the rear
Reversing Alarm	1 pc

Cabin

The cabin provides an excellent ergonomic operating space, reducing operator fatigue by increasing legroom and improving pedal position.

The cabin has passed ROPS/FOPS certification to protect the operator's safety. The closed cabin interior is made of 25mm flame-retardant and noise-reducing interior fabric, which is not only beautiful and comfortable, but also effective in dust prevention and noise reduction.

The cabin and frame are fixed with rubber shock absorbers to reduce the vibration of the cabin.

CABIN
ROPS certified according to ISO 3471
FOPS certified according to ISO 3449
Closed air-conditioned cabin
Large windshield, sliding windows and rearview mirrors
Laminated glass windows, using four sealing strips, glass can be removed inside and outside
Sound-absorbing, noise reducing and flame-retardant interior and thermal insulation cotton
Emergency exit
Washable cabin floor to reduce dust
Adjustable operating handle and armrest
Three-point entry system for the cabin
Main circuit breaker release button
Emergency exit
Three-point entry system for the cabin
Main circuit breaker remote release button

DASHBOARD
The color display 7” screen can flexibly switch between various interfaces and adjust brightness, time, download/upload programs and other operations
Display screen display machine parameters and various alarm information, allowing the operator to understand the real-time status of the truck and operate the truck more efficiently and safely
Industrial intelligent control system
Warning and alarm systems have sound and light alarm prompts
Dashboard has fully functional rocker switch control, colored status and warning lights, fault diagnosis, communication interface

SEAT
The driver's seat is an adjustable spring-shock-absorbing seat with 3-point safety belt
Complies with EM1 vibration level
The suspension seat can be adjusted up and down, front and back
Adjustable back support and arm rests

WHEELS	
Tire Dimensions	35.65 R33 ETNT

Frame (Chassis)

The heavy-duty rear frame provides better stability during transport and loading and unloading of ore. The heavy-duty front frame and cabin minimize damage from impact and collision with tunnel walls.

It uses high-strength alloy Q460C steel plates to optimize material thickness, improve overall transportation capacity, and has high structural reliability and long service life.

The dump box adopts a box-type structure to improve the overall strength of the transportation and is optimized to reduce damage from impact and collision of tunnel walls and extend its service life.



FRAME (CHASSIS)
Dump box made of high-strength, wear-resistant steel
Adopt high-strength alloy steel plate, optimize material thickness, improve overall transportation capacity, and prolong the structure life

HYDRAULIC SYSTEM
When the cabin door is not locked, the truck is braked
Working efficiency is increased with 2 radiators, namely hydraulic oil radiator and transmission oil radiator
Cooling motor brand is Parker

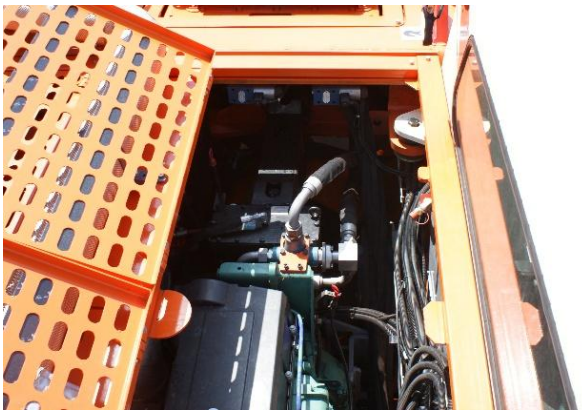

STEERING HYDRAULIC SYSTEM
Steering wheel is used for steering
Fully hydraulic central articulated steering
Steering main valve is open type
Two double-acting steering hydraulic cylinders
Steering pump is variable displacement



DUMP BOX HYDRAULIC SYSTEM	
When not steering, the steering hydraulic pump merges with the working hydraulic pump to improve work efficiency	
Working valve brand is Walvoil	
Lifting cylinder	2 pcs
Dump box main valve	open type
Dump box pump	variable displacement pump

BRAKE HYDRAULIC SYSTEM	
It adopts spring brake and fully enclosed multi-disc wet brake; it integrates service brake, parking brake and emergency brake.	
Automatic brake activation system	standard
Manual emergency brake release pump	standard

WORKING ENVIRONMENT CONDITIONS	
Temperature	-15°C ~ +45°C
Altitude	no power loss below 3000 meters above sea level



STANDARD FEATURES
Portable fire extinguisher
Heat source isolation protective cover
Exhaust pipe insulation cotton protection
Turbocharger guard
Cooling fan guard
Main power switch can be locked
Automatic centralized lubrication system
Emergency stop button is 2 pcs in front and 1 pc in the cabin
Manual pressure release cap for engine water tank
Dump box inspection locking device
Front and rear chassis locking devices
Closed cabin
Automatic centralized lubrication system
Automatic dry powder fire extinguishing system
Air conditioning and refrigeration system
Air conditioning and heating system
Automatic emergency brake release pump
Reversing camera system
Front window defogger function

OPTIONAL ENGINE	
Model	VOLVO TAD 1643 VE
Power	565kW(768Hp)@1900rpm
Max. Torque	3260Nm@1260rpm
Cylinder	In Line 6
Electric	24 V
Control System	Electronic fuel injection
Cooling	Water-cooled engine
Starter	24 V starter motor
Emission	Euro 3
Air Intake	Turbocharged Dry air filtration Prefiltration Two-stage filtration
Exhaust System	DOC + POC + Silencer
Average Fuel Consumption	50 L/h



OPTIONS
Emergency steering
Automatic weighing system
Driving recorder
Tire pressure monitoring system
Push-away dump box
Customize other dump box capacities
Replace tires
Remote control system
Anti-collision system
Production management system
Unmanned driving system

DOCUMENTS
Operation manual (Turkish-English)
Maintenance manual (Turkish-English)
Spare parts manual (Turkish-English)

Grade Performance Data

Volvo Penta TAD 1643VE Stage III (3% rolling resistance assumed, with lock-up engaged)					
Grade (%)	*0*	*5*	*10*	*15*	*20*
			Ratio		
Unloaded and Full Loaded					
1st gear (km/h)	6.5	6.3	6.2	6.0	5.9
2nd gear (km/h)	9.9	9.5	9.3	9.0	5.0
3rd gear (km/h)	13.3	13.2	12.9	12.8	
4th gear (km/h)	19.8	19.6	8.0		
5st gear (km/h)	26.7	19.3			
6nd gear (km/h)	39.8	1.6			



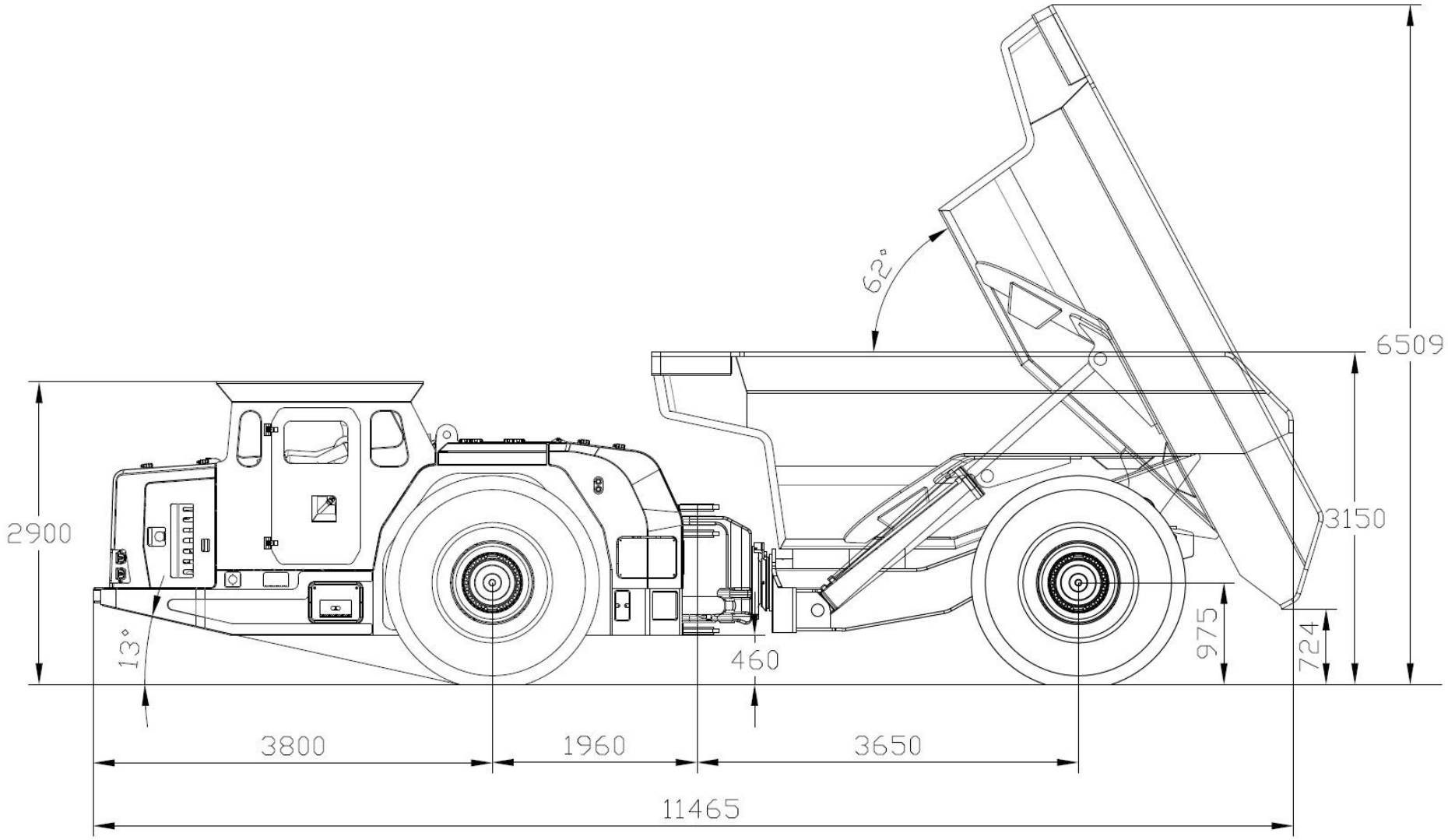
62°
6509
2900
3150
13°
460
975
724
3800
1960
3650
11465

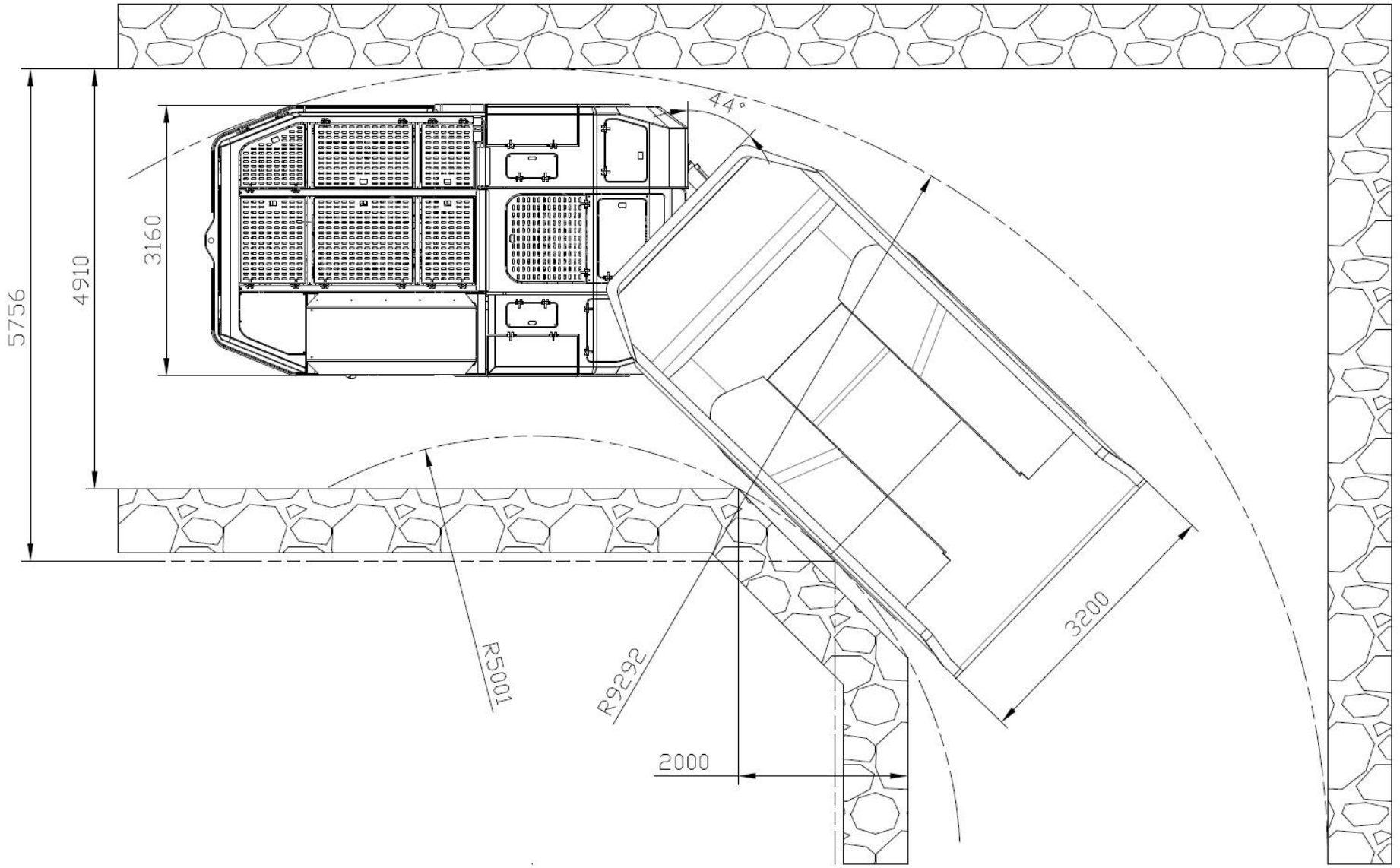
5756
4910
3160
44°
R5001
R9292
3200
2000



KARER

KARER KARADAVUT ERDEM MAKİNA ENERJİ SANAYİ VE TİCARET LİMİTED ŞİRKETİ

+90 553 531 77 50 satis@karer.tr

Ostim OSB Mh. 1235. Cd. No:81 Yenimahalle / ANKARA

www.karer.tr