KARER

TECHNICAL BROCHURE

UT 40

UNDERGROUND TRUCK

20 M^3 DUMP BOX VOLUME, 40 TONS PAYLOAD CAPACITY



KARER UT 40 is an articulated underground mining truck with a 40-ton carrying capacity. It has innovative features that can easily handle harsh working conditions, providing powerful power, strength and reliability to help you maximize your productivity.

The heavy-duty frame is designed to cope with harsh underground environments. It is made of the best Q460C steel plate, robot-automatic welding, and integrated processing technology to ensure reliability and durability. The central articulation uses a 100% maintenance-free, fully sealed swivel joint to reduce downtime, lower operating costs, and ensure that the front and rear frames can swing freely to form good contact with the ground under harsh working conditions.

Adopt Euro 5 (Stage V) or optional Euro 3 emission VOLVO PENTA (Sweden) engine, which has quick response, excellent efficiency and excellent service life.

The automatic shifting DANA gearbox provides unparalleled transmission efficiency and controllability. The gearbox is sturdy and durable, has a long service life, and is equipped with a lock.

All four wheels with KESSLER (Germany) are equipped with spring-loaded, hydraulically released normally closed wet multi-disc brakes, which, combined with an automatically controlled hydraulic retarder to assist braking, give the vehicle excellent braking performance.

The ROPS/FOPS certified cab can be equipped with cooling and heating air conditioning systems, an ergonomically designed operating table, and adjustable suspension that meets the product vibration level, allowing the operator to control the equipment more effectively in a safe, comfortable and efficient environment. The electromechanical and hydraulic integrated control system monitors all equipment parameters in real time to ensure human and machine safety. The cabin allows for quick viewing of various information and provides fault diagnosis.

CAPACITIES	
Standard Dump Box	20 m^3
Payload	40.000 kg
Max Climbing Grade	14°
Dumping Angle	62°
Oscillation	8°

DIMENSIONS	
Length*Width*Height (cm)	1057*307*281
Min. Ground Clearance	37 cm

SPEEDS	
Speed (1st Gear) (Reverse or Front)	4.7 km/h
Speed (2nd Gear) (Front)	6.2 km/h
Speed (3rd Gear) (Reverse or Front)	8.5 km/h
Speed (4th Gear) (Front)	11.1 km/h
Speed (5th Gear) (Reverse or Front)	14.9 km/h
Speed (6th Gear) (Front)	19.5 km/h
Speed (7th Gear) (Reverse or Front)	26.4 km/h
Speed (8th Gear) (Front)	34.6 km/h

WEIGHTS	
Operating Weight	37,800 kg
Loaded Weight	77,800 kg
Front Axle (Unloaded)	25,900 kg
Rear Axle (Unloaded)	11,900 kg
Front Axle (Loaded)	36,550 kg
Rear Axle (Loaded)	41,250 kg

*Truck weight depends on options selected

TRANSMISSION	
Torque Converter	
Brand	DANA
Model	C8000 Series with torque converter lockup
Gearbox	
Brand	DANA
Model	8000 Series
Features	Electronic shifting Gear shifting buffer function 8 forward gears and 4 reverse gears

AXLES	
Brand	Kessler (Germany)
Front Axle	Model: D106 SAHR - Standard Oscillation
Rear Axle	Model: D102 SAHR - Standard Fixed

BRAKES
It adopts spring brake, fully enclosed multi-disc wet brake
It integrates service brake, parking brake and emergency brake
It has two independent pipeline controls, one for the front axle and the other for the rear axle
Automatic brake activation system
Manual emergency brake release pump is standard. In case of engine stoppage, truck can be easily withdrawn from underground



ENGINE	
Model	VOLVO TAD 1385 VE
Power	405kW(551Hp)@1700rpm
Max. Torque	2650 Nm@1260rpm
Cylinder	In Line 6
Electric	24 V
Control System	Electronic fuel injection
Cooling System	Water-cooled engine
Starter	7.8 kW motor
Emission	Stage V (Euro 5)
Air Intake	Turbocharged Dry air filtration Prefiltration Two-stage filtration
Exhaust System	SCR+DPF+Urea Tank
Average Fuel Consumption	40 L/h

TANK CAPASITIES	
Fuel Tank	700 liters
Dump Box Hydraulic Oil Tank	250 liters
Brake Hydraulic Oil Tank	100 liters

ELECTRIC	
Battery	2 * 12V, 150 Ah
Starter	7 kW / 24 V
Dynamo (Alternator)	28 V, 150 A
Dual power main switch is standard with locking	
Horn/Back-up siren is standard	
Flashing warning lights are standard	
Parking/ brake indicator lights are standard	
Control System	Programmable
	Built-in diagnostic system
	Vehicle fault self-diagnosis system
	Engine fault diagnosis system
	Transmission fault diagnosis system
	Electronic limit function for steering, carriage lifting and lowering
	Automatic parking/stop function
	Fire extinguishing activated automatic power off function
	Automatic hydraulic retarding function
	Industrial patented antirollover function
	7” color display
Camera System	1 pc camera on the rear
	1 pc monitor in the cabin
Driving Lights	
Front	2 pcs LED
Rear	3 pcs LED
Cabin	3 pcs LED
Brake (at Rear)	2 pcs LED
Turning Signal	2 pcs on the front 2 pcs on the rear
Red and Green Indicator Lights	2 pcs on the front 2 pcs on the rear
Reversing Alarm	1 pc

Cabin

The cabin provides an excellent ergonomic operating space, reducing operator fatigue by increasing legroom and improving pedal position.

The cabin has passed ROPS/FOPS certification to protect the operator's safety.

The closed cabin interior is made of 25mm flame-retardant and noise-reducing interior fabric, which is not only beautiful and comfortable, but also effective in dust prevention and noise reduction.

The cabin and frame are fixed with rubber shock absorbers to reduce the vibration of the cabin.

CABIN
ROPS certified according to ISO 3471
FOPS certified according to ISO 3449
Closed air-conditioned cabin
Large windshield, sliding windows and rearview mirrors
Laminated glass windows, using four sealing strips, glass can be removed inside and outside
Sound-absorbing, noise reducing and flame-retardant interior and thermal insulation cotton
Emergency exit
Washable cabin floor to reduce dust
Adjustable operating handle and armrest
Three-point entry system for the cabin
Main circuit breaker release button
Three-point entry system for the cabin
Main circuit breaker remote release button

DASHBOARD
The color display 7” screen can flexibly switch between various interfaces and adjust brightness, time, download/upload programs and other operations
Display screen can display machine parameters and various alarm information, allowing the operator to understand the real-time status of the truck and operate the truck more efficiently and safely

Industrial standard intelligent control system
Dashboard has fully functional rocker switch control, clearly colored status and warning lights, fault diagnosis, communication interface

SEAT
The driver's seat is an adjustable spring-shock-absorbing seat with 2 point safety belt
Complies with equipment vibration level EM1
The seat can be adjusted up and down, front and back
Adjustable back support and arm rests

WHEELS	
Tire Dimensions	26.50 R25 ETNT

FRAME (CHASSIS)
Dump box made of high-strength, wear-resistant steel
Adopt high-strength alloy steel plate, optimize material thickness, improve overall payload capacity, and prolong the structure life

HYDRAULIC SYSTEM
When the cabin door is not locked, the truck is braked
Working efficiency is increased with 2 radiators, namely hydraulic oil and transmission oil
Cooling motor brand is Parker

STEERING HYDRAULIC SYSTEM
Steering wheel is used for steering
Fully hydraulic central articulated steering
Steering main valve is open type
Two double-acting steering hydraulic cylinders
Steering pump is gear pump and Danfoss brand
Working steering pump brand is Casappa

DUMP BOX HYDRAULIC SYSTEM	
When not steering, the steering hydraulic pump merges with the working hydraulic pump to improve work efficiency	
Working valve brand is Walvoil	
Lifting cylinder	2 pcs
Dump box main valve	open type
Dump box pump	gear pump

BRAKE HYDRAULIC SYSTEM
It adopts spring brake and fully enclosed multi-disc wet brake; it integrates service brake, parking brake and emergency brake.
Automatic brake activation system
Manual emergency brake release pump
Brake valve brand is Mico

WORKING ENVIRONMENT CONDITIONS	
Temperature	-15°C ~ +45°C
Altitude	-1500 m to + 3000 m at 25°C without rated power derate

STANDARD FEATURES
Portable fire extinguisher
Heat source isolation protective cover
Exhaust pipe insulation cotton protection
Turbocharger guard
Cooling fan guard
Main power switch can be locked
Automatic centralized lubrication system
Emergency stop button is 2 pcs in front and 1 pc in the cabin
Engine water tank manual pressure release cap
Accumulator manual pressure relief device
Dump box inspection locking device
Front and rear axle locking devices
Closed cabin
Manual dry powder fire extinguishing system
Carriage inspection locking device
Air conditioning and refrigeration system
Air conditioning and heating system
Automatic dry powder fire extinguishing system
Reversing camera system
Front window defogger function

OPTIONAL ENGINE	
Model	VOLVO TAD 1650 VE
Power	405kW (551Hp)@1700rpm
Max. Torque	2757 Nm@1260rpm
Cylinder	In Line 6
Electric	24 V
Control System	Electronic fuel injection
Cooling System	Water-cooled engine
Starter	7.8 kW motor
Emission	Euro 3
Air Intake	Turbocharged Dry air filtration Prefiltration Two-stage filtration
Exhaust System	DOC + POC + Silencer
Average Fuel Consumption	40 L/h

OPTIONS
Electric emergency brake release pump
Emergency steering
Automatic weighing system
Driving recorder
Tire pressure monitoring system
Push-away dump box
Customize other dump box capacities
Replace tires
Remote control system
Anti-collision system
Production management system
Unmanned driving system

DOCUMENTS
Operation manual (Turkish-English)
Maintenance manual (Turkish-English)
Spare parts manual (Turkish-English)

Grade Performance Data

Volvo Penta TAD 1385VE Stage V (3% rolling resistance assumed, with lock-up engaged)					
Grade (%)	*0*	*5*	*10*	*15*	*20*
			Ratio		
Unloaded (km/h)					
1st gear	4.7	4.6	4.6	4.6	4.6
2nd gear	6.2	6.0	6.0	6.0	6.0
3rd gear	8.5	8.3	8.3	8.3	8.2
4th gear	11.2	10.8	10.8	10.7	10.6
5th gear	15.0	14.7	14.6	14.4	14.2
6th gear	19.7	19.2	18.8	18.4	17.9
7th gear	26.7	26.1	25.5	25.0	
8th gear	35.2	34.3	30.1		
Loaded (km/h)					
1st gear	4.7	4.6	4.6	4.5	4.5
2nd gear	6.2	6.2	6.1	5.9	5.7
3rd gear	8.5	8.4	8.1	7.8	5.2
4th gear	11.1	11.0	10.3	9.0	
5th gear	14.9	14.3	12.4		
6th gear	19.5	18.2	12.0		
7th gear	26.4	16.4			
8th gear	34.6				



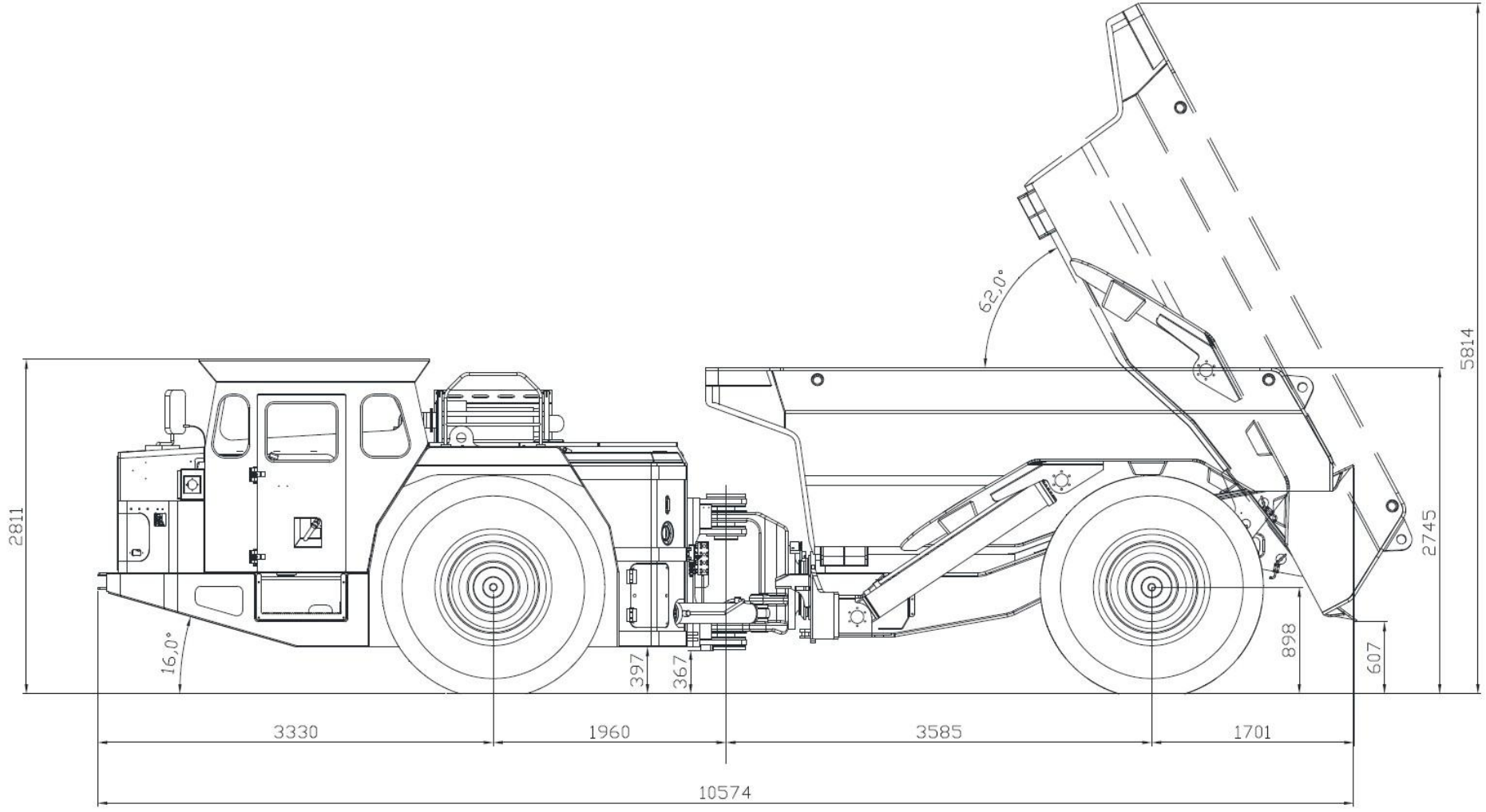
62,0°
5814
2811
2745
16,0°
898
607
397
367
3330
1960
3585
1701
10574

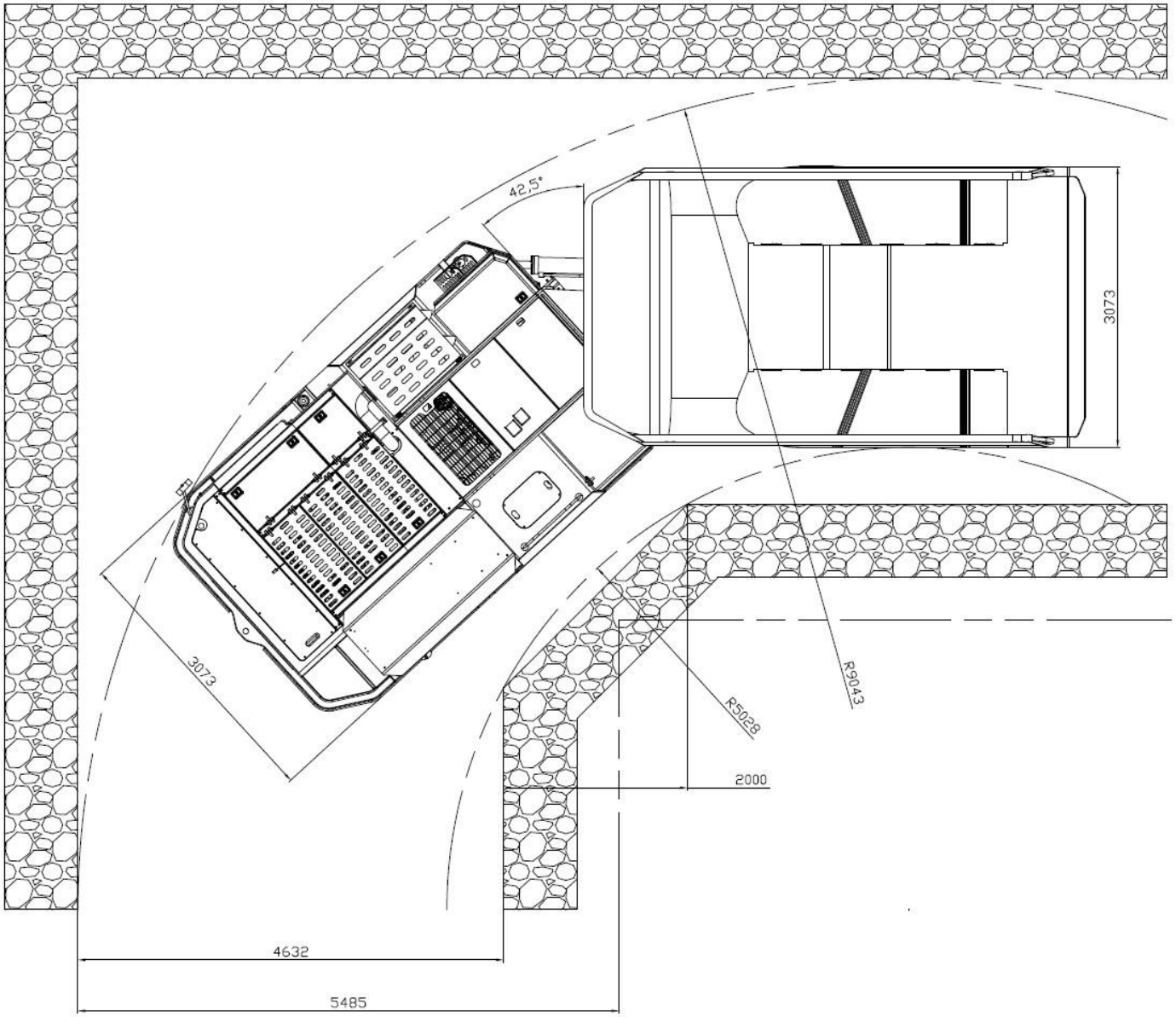
42,5°
3073
3073
R9043
R5028
2000
4632
5485



KARER

KARER KARADAVUT ERDEM MAKİNA ENERJİ SANAYİ VE TİCARET LİMİTED ŞİRKETİ

+90 553 531 77 50 satis@karer.tr

Ostim OSB Mh. 1235. Cd. No:81 Yenimahalle / ANKARA

www.karer.tr