KARER

TECHNICAL BROCHURE

UT 30

UNDERGROUND TRUCK

15 M^3 DUMP BOX VOLUME, 30 TONS PAYLOAD CAPACITY



KARER UT 30 is an articulated underground mining truck with a 30-ton capacity. It's packed with innovative features to handle the toughest conditions, providing the power, strength and reliability to help you maximize productivity.

The central articulation adopts a 100% maintenance-free, fully sealed rotary joint device, which can shorten downtime and reduce operating costs, and ensure that the front and rear frames can swing freely to form good contact with the ground under harsh working conditions.

Adopt Euro 5 (Stage V) or optional Euro 4 emission VOLVO PENTA (Sweden) engine, which has quick response, excellent efficiency and excellent service life.

Automatic shifting DANA transmission provides unparalleled transmission efficiency and controllability. The transmission is durable, has a long service life, and is equipped with a lock-up mechanism.

All four wheels with KESSLER (Germany) are equipped with spring-loaded, hydraulically released normally closed wet multi-disc brakes, which, combined with an automatically controlled hydraulic retarder to assist braking, give the vehicle excellent braking performance.

The ROPS/FOPS certified cabin can be equipped with cooling and heating air conditioning systems, an ergonomically designed operator station, and adjustable suspension that meets the product's vibration level, allowing operators to more effectively control the equipment in a safe, comfortable and efficient environment.

The electromechanical and hydraulic integrated control system monitors all equipment parameters in real time to ensure human and machine safety. The cabin allows for quick viewing of various information and provides fault diagnosis.

CAPACITIES	
Standard Dump Box	15 m^3
Payload	30.000 kg
Max Climbing Grade	15°
Dumping Angle	65°
Oscillation	8°

DIMENSIONS	
Length*Width*Height (cm)	992*280*256
Min. Ground Clearance	36 cm

SPEEDS	
Speed (1st Gear)	5.1 km/h
Speed (2nd Gear)	9.1 km/h
Speed (3rd Gear)	16.1 km/h
Speed (4th Gear)	28.5 km/h

WEIGHTS	
Operating Weight	32,080 kg
Loaded Weight	62,080 kg
Front Axle (Unloaded)	20,200 kg
Rear Axle (Unloaded)	11,880 kg
Front Axle (Loaded)	29,580 kg
Rear Axle (Loaded)	32,500 kg

*Truck weight depends on options selected

TRANSMISSION	
Torque Converter	
Brand	DANA
Model	C8000 Series with torque converter lockup
Gearbox	
Brand	DANA
Model	6000 Series
Features	Electronic shifting Gear shifting operation&steering handle integrated control Four gears forward and reverse

AXLES	
Brand	Kessler (Germany)
Front Axle Oscillation	Model: D102 SAHR Standard
Rear Axle Fixed	

BRAKES
It adopts spring brake, fully enclosed multi-disc wet brake
It integrates service brake, parking brake and emergency brake
It has two independent pipeline controls, one for the front axle and the other for the rear axle
Automatic brake activation system
Manual emergency brake release pump is standard. In case of engine stoppage, truck can be easily withdrawn from underground



ENGINE	
Model	VOLVO TAD 1382 VE
Power	315kW(428Hp)@1900rpm
Max. Torque	2175 Nm@1200rpm
Cylinder	In Line 6
Electric	24 V
Control System	Electronic fuel injection system
Cooling System	Water-cooled engine
Starter	7.8 kW motor
Emission	Stage V (Euro 5)
Air Intake	Turbocharged Dry air filtration Prefiltration Two-stage filtration
Exhaust System	Aftertreatment system
Average Fuel Consumption	30 L/h

TANK CAPASITIES	
Fuel Tank	360 liters
Dump Box Hydraulic Oil Tank	350 liters
Brake Hydraulic Oil Tank	80 liters

ELECTRIC	
Battery	2 * 12V, 165 Ah
Starter	7 kW / 24 V
Dynamo (Alternator)	28 V, 150 A
Dual power main switch is standard with locking	
Horn/Back-up siren is standard	
Flashing warning lights are standard	
Parking/ brake indicator lights are standard	
Control System	Programmable
	Built-in diagnostic system
	7 ” color display
Camera System	1 pc camera on the rear
	1 pc monitor in the cabin
Driving Lights	
Front	6 pcs LED
Rear	2 pcs LED
Cabin	2 pcs LED
Brake (at Rear)	2 pcs LED
Turning Signal	2 pcs on the front 2 pcs on the rear
Red and Green Indicator Lights	2 pcs on the front 2 pcs on the rear
Reversing Alarm	1 pc

Cabin

The cabin provides an excellent ergonomic operating space, reducing operator fatigue by increasing legroom and improving pedal position.

The cabin has passed ROPS/FOPS certification to protect the operator's safety.

The closed cabin interior is made of 25mm flame-retardant and noise-reducing interior fabric, which is not only beautiful and comfortable, but also effective in dust prevention and noise reduction.

The cabin and frame are fixed with rubber shock absorbers to reduce the vibration of the cabin.

CABIN
ROPS certified according to ISO 3471
FOPS certified according to ISO 3449
Closed air-conditioned cabin
Large windshield, sliding windows and rearview mirrors
Laminated glass windows, using four sealing strips, glass can be removed inside and outside
Sound-absorbing, noise reducing and flame-retardant interior and thermal insulation cotton
Emergency exit
Washable cabin floor to reduce dust
Adjustable operating handle and armrest
Three-point entry system for the cabin
Main circuit breaker release button
Seating area with very good two-way visibility and comfortable use during operation

DASHBOARD
The color display 7” screen can flexibly switch between various interfaces and adjust brightness, time, download/upload programs and other operations
Display screen can display machine parameters and various alarm information, allowing the operator to understand the real-time status of the truck and operate the truck more efficiently and safely
Industrial standard intelligent control system
Warning and alarm systems have sound and light alarm prompts
Dashboard has fully functional rocker switch control, clearly colored status and warning lights, fault diagnosis, communication interface

SEAT
The driver's seat is an adjustable spring-shock-absorbing seat with a three-point safety belt
The seat can be adjusted up and down, front and back
The seat is equipped with a padded arm rest and an adjustable joystick that can be installed on the canopy door or the right wall of the canopy
Mechanical suspension
Adjustable back support
Three-point seat belt

WHEELS	
Tire Dimensions	26.50 R25 ETNT

FRAME (CHASSIS)
Dump box made of high-strength, wear-resistant steel
Adopt high-strength alloy steel plate, optimize material thickness, improve overall transportation capacity, and prolong the structure life
Central hinge is slewing bearing

HYDRAULIC SYSTEM
When the cabin door is not locked, the truck is braked
Working efficiency is increased with 2 radiators, namely hydraulic oil radiator and transmission oil radiator
Cooling motor brand is Parker

STEERING HYDRAULIC SYSTEM
Steering wheel is used for steering
Fully hydraulic central articulated steering
Steering main valve is open type
Two double-acting steering hydraulic cylinders
Steering pump is gear pump and Danfoss brand
Working steering pump brand is Casappa

DUMP BOX HYDRAULIC SYSTEM	
When not steering, the steering hydraulic pump merges with the working hydraulic pump to improve work efficiency	
Working valve brand is Walvoil	
Lifting cylinder	2 pcs
Dump box main valve	open type
Dump box pump	gear pump

BRAKE HYDRAULIC SYSTEM
It adopts spring brake and fully enclosed multi-disc wet brake; it integrates service brake, parking brake and emergency brake.
Automatic brake activation system
Manual emergency brake release pump
Brake valve brand is Mico

WORKING ENVIRONMENT CONDITIONS	
Temperature	-15°C ~ +45°C
Altitude	-1500 m to + 3000 m at 25°C without rated power derate

STANDARD FEATURES
Portable fire extinguisher
Heat source isolation protection cover
Exhaust pipe insulation cotton protection
Turbocharger guard
Cooling fan guard
Main power switch can be locked
Automatic centralized lubrication system
Emergency stop button is 2 pcs in rear and 1 pc in the cabin
Engine water tank manual pressure release cap
Accumulator manual pressure relief device
Dump box inspection locking device
Electric emergency brake release pump
Manual emergency brake release pump
Front and rear axle locking device
Closed cabin
Automatic centralized lubrication system
Manual dry powder fire extinguishing system
Air conditioning and refrigeration system
Air conditioning and heating system

OPTIONAL ENGINE	
Model	VOLVO TAD 1372 VE
Power	315kW (428 Hp) @1900rpm
Max. Torque	2175 Nm@1200rpm
Cylinder	In Line 6
Electric	24 V
Control System	Electronic fuel injection
Cooling System	Water-cooled engine
Starter	7.8 kW motor
Emission	Euro 4
Air Intake	Turbocharger Dry air filtration Prefiltration Two-stage filtration
Exhaust System	SCR + AdBlue
Average Fuel Consumption	30 L/h

OPTIONS
Manual centralized lubrication system
Automatic dry powder fire extinguishing system
Electric emergency brake release pump
Front window defogger function
Emergency steering
Automatic weighing system
Driving recorder
Tire pressure monitoring system
Push-away dump box
Customize other dump box capacities
Replace tires
Remote control system
Anti-collision system
Production management system
Unmanned driving system



DOCUMENTS
Operation manual (Turkish-English)
Maintenance manual (Turkish-English)
Spare parts manual (Turkish-English)

www.karer.tr Ostim OSB Mh. 1235. Sk. No:81 Yenimahalle / Ankara +90 553 531 77 50

Grade Performance Data

Volvo Penta TAD 1382VE Stage V (3% rolling resistance assumed, with lock-up engaged)					
Grade (%)	*0*	*5*	*10*	*15*	*20*
	Ratio				
Unloaded					
1st gear (km/h)	5.1	5.1	5.1	5.0	5.0
2nd gear (km/h)	9.1	9.0	8.8	8.7	8.6
3rd gear km/h)	16.1	15.9	14.0	12.1	
4th gear km/h)	28.8	27.0			
Loaded					
1st gear (km/h)	5.1	5.1	5.0	5.0	4.9
2nd gear (km/h)	9.1	9.0	8.7	7.7	5.4
3rd gear km/h)	16.1	15.5	9.5		
4th gear km/h)	28.5	17.0			



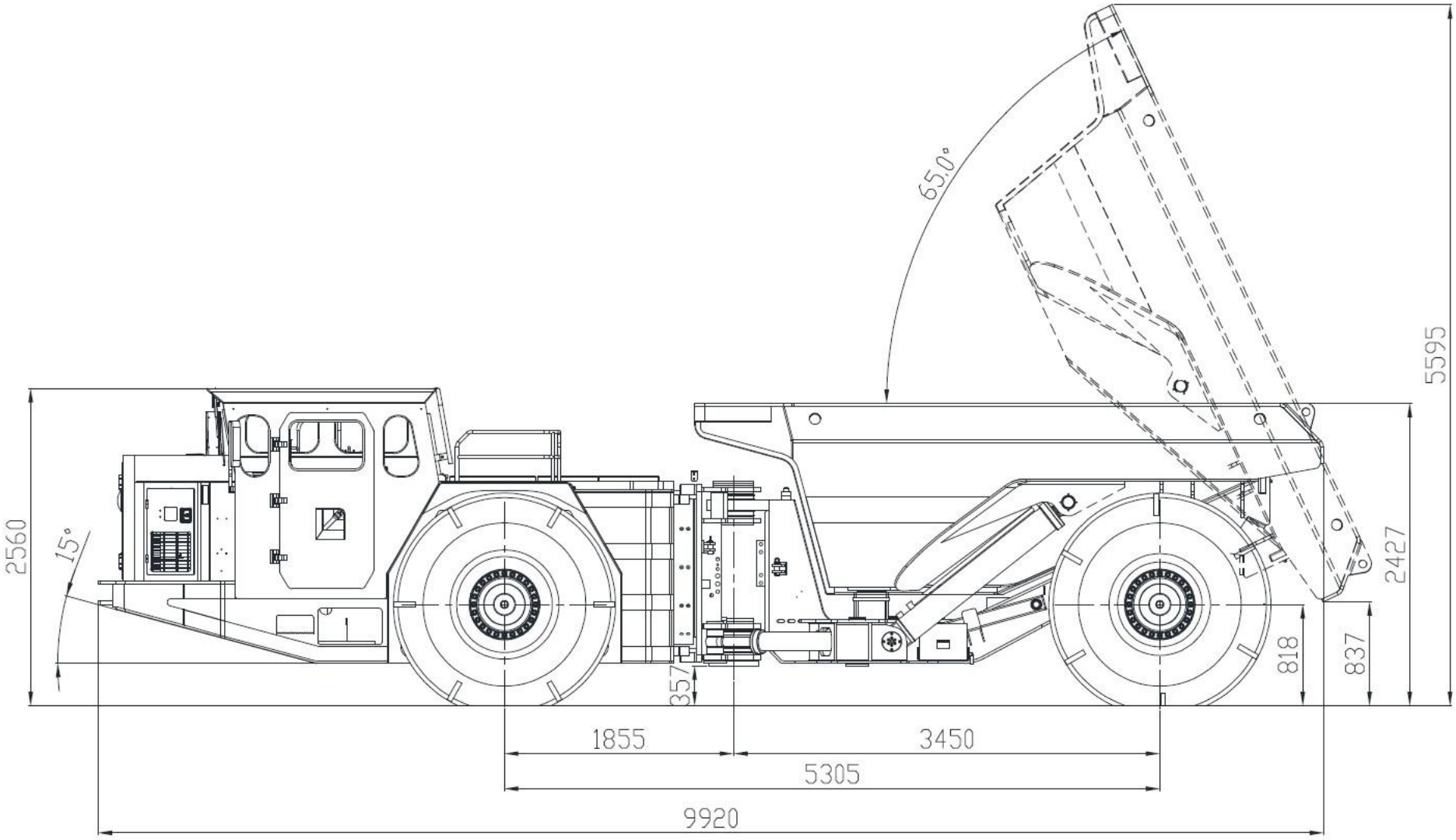
65.0°
5595
2560
15°
2427
818
837
357
1855
3450
5305
9920

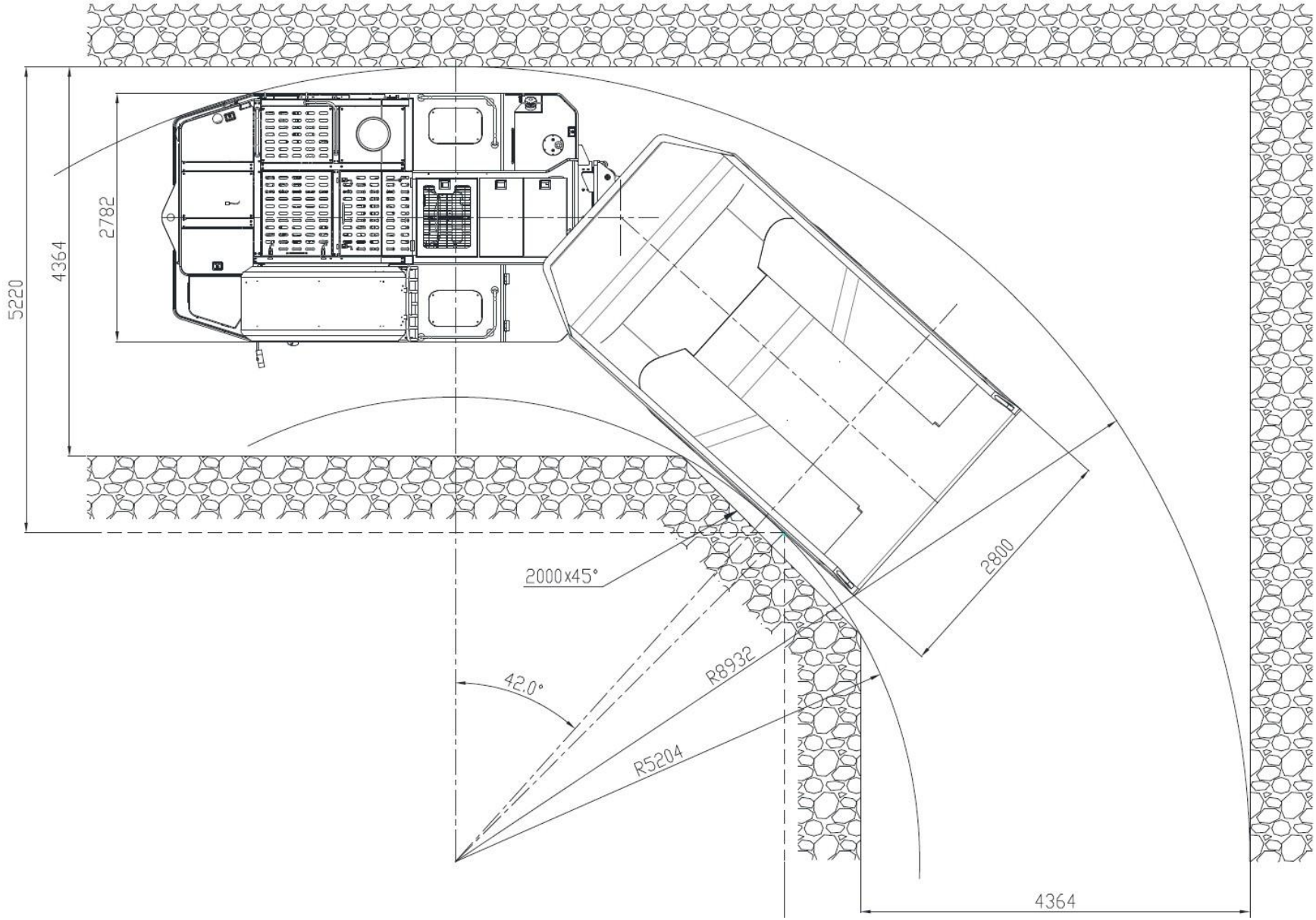
5220
4364
2782
2000x45°
2800
42.0°
R8932
R5204
4364



KARER

KARER KARADAVUT ERDEM MAKİNA ENERJİ SANAYİ VE TİCARET LİMİTED ŞİRKETİ

+90 553 531 77 50 satis@karer.tr

Ostim OSB Mh. 1235. Cd. No:81 Yenimahalle / ANKARA

www.karer.tr