KARER

TECHNICAL BROCHURE

UT 15

UNDERGROUND TRUCK

7.5 M^3 DUMP BOX VOLUME, 15 TONS PAYLOAD CAPACITY



KARER UT 15 is an articulated underground mining truck with a **15-ton capacity**. It's packed with innovative features to handle the toughest conditions, providing the power, strength and reliability to help you maximize productivity.

The central articulation adopts a maintenance-free, fully sealed rotary joint device, which can shorten downtime and reduce operating costs, and ensure that the front and rear frames can swing freely to form good contact with the ground under **harsh working conditions**.

Adopt **Euro 5 (Stage V)** or Euro 4 emission **CUMMINS** engines which has quick response, excellent efficiency and excellent service life. You have peace of mind with the high-efficiency, low-fuel consumption, easy-to-access spare parts with these engines.

The automatic shifting **DANA transmission** provides unparalleled transmission efficiency and control. The transmission is durable, has a long service life, and is equipped with a lock-up mechanism.

All four wheels with **KESSLER** (Germany) **axles** are equipped with spring-loaded, hydraulically released normally closed wet multi-disc brakes.

The **ROPS/FOPS certified cabin** can be equipped with an ergonomically designed operator station, and adjustable suspension that meets the product's vibration level, allowing operators to more effectively control the equipment in a safe, comfortable and efficient environment.

The cab allows for quick viewing of various information and provides fault diagnosis.

CAPACITIES	
Standard Dump Box	7.5 m^3
Payload	15,000 kg
Max Climbing Grade	15°
Dumping Angle	69°
Oscillation	8°

DIMENSIONS	
Length*Width*Height (cm)	796*205*236
Min. Ground Clearance	37 cm

SPEEDS	
Speed (1st Gear)	5.2 km/h
Speed (2nd Gear)	10.3 km/h
Speed (3rd Gear)	17.3 km/h
Speed (4th Gear)	27.9 km/h

WEIGHTS	
Operating Weight	15,500 kg
Loaded Weight	30,500 kg
Front Axle (Unloaded)	10,500 kg
Rear Axle (Unloaded)	5,000 kg
Front Axle (Loaded)	14,200 kg
Rear Axle (Loaded)	16,300 kg

*Truck weight depends on options selected

TRANSMISSION	
Torque Converter	
Brand	DANA
Model	C270 Series
Gearbox	
Brand	DANA
Model	T14 Series
Features	Electronic shifting 4 forward and 4 reverse gears

AXLES	
Brand	Kessler (Germany)
Front Axle	Model: D81 SAHR (Spring Applied Hydraulic Release) Standard
Rear Axle	Model: D91 SAHR (Spring Applied Hydraulic Release) Standard

BRAKES
It adopts spring brake, fully enclosed multi-disc wet brake
It integrates service brake, parking brake and emergency brake braking into one unit

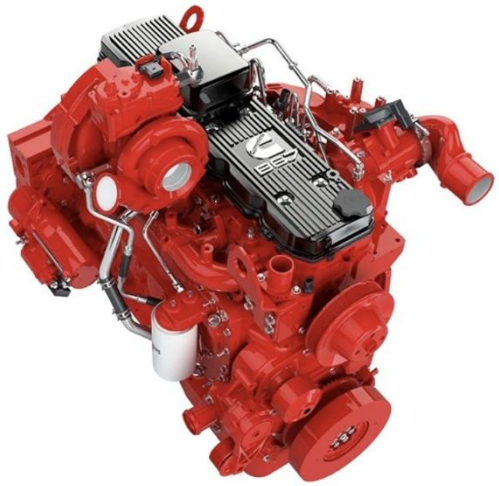

ENGINE	
Model	CUMMINS B6.7
Power	168kW(225Hp)@2000rpm
Max. Torque	949Nm@1200rpm
Cylinder	In Line 6
Electric	24 V
Control System	Electronic fuel injection
Cooling System	Water-cooled engine, Direct-drive fan
Fuel System	Remote oil filter Fuel filter Oil-water separator
Starter	7.8 kW motor
Emission	Euro 5 (Stage V)
Air Intake	Low-profile turbocharger Dry air filtration Prefiltration Two-stage filtration
Exhaust System	DOC + DPF + SCR with urea tank
Average fuel consumption	17 L/h

ELECTRIC	
Battery	2 * 12V, 120 Ah
Starter	7.8 kW / 24 V
Dynamo	24 V, 70 A

Horn/Back-up siren is standard

Flashing warning lights are standard	
Parking/ brake indicator lights are standard	
Control System	Fully functional rocker switch
	7” color display
Driving Lights	
Front	2 pcs
Rear	2 pcs
Cabin	2 pcs
Alarm prompt	Low oil pressure alarm Rotary alarm light
Dual speaker configuration	Standard

TANK CAPASITIES	
Fuel Tank	180 liters
Hydraulic Oil Tank	160 liters



Cabin

The cabin provides an excellent ergonomic operating space, reducing operator fatigue by increasing legroom and improving pedal position.

The cabin has passed ROPS/FOPS certification to protect the operator's safety.

The cabin and frame are fixed with rubber shock absorbers to reduce the vibration of the cabin.

CABIN
ROPS certified according to ISO 3471
FOPS certified according to ISO 3449
Emergency exit
Washable cabin floor to reduce dust
Adjustable operating handle and armrest
Three-point entry system for the cabin
Main circuit breaker release button
Seating area with very good two-way visibility and comfortable use during operation

Frame (Chassis)

The rear chassis features a heavy-duty design, providing better stability during ore transport and loading/unloading. The heavy-duty front frame and cab minimize damage from impacts and collisions with the tunnel walls.

KARER UT 15 uses high-strength alloy Q460C steel plate, optimizes material thickness, reduces weight, improves overall transportation capacity, has high structural reliability, and long service life.

The dump box adopts a box-type structure to improve the overall strength of the carriage, and has been optimized to reduce damage from impacts and collisions from the tunnel walls and extend its service life.

FRAME (CHASSIS)
Dump box made of high-strength, wear-resistant steel
Adopt high-strength alloy steel plate, optimize material thickness, improve overall transportation capacity, and prolong the structure life
Central hinge is slewing bearing

DASHBOARD
Dashboard shows the necessary engine information on a large screen, giving the operator more time to focus on the road.
Warning and alarm systems have sound and light alarm prompts
Dashboard is 7” color display
Dashboard has fully functional rocker switch control

WHEELS	
Tire Dimensions	16.00 R25

SEAT
The driver's seat is an adjustable spring-shock-absorbing seat with a three-point safety belt
The seat can be adjusted up and down, front and back
Spring shock absorber
Height adjustable
Arm rests
Adjustable back support

HYDRAULIC SYSTEM
Working efficiency is increased with 2 radiators, namely hydraulic oil radiator and transmission oil radiator
Working and steering dual pump brand is Permco (USA)
Working valve brand is Walvoil (Italy)
Full hydraulic steering unit brand is Eaton (USA)

STEERING HYDRAULIC SYSTEM	
Steering wheel is used for steering	
Fully hydraulic central articulated steering	
Steering main valve is open type	
Two double-acting steering hydraulic cylinders	
Steering hydraulic cylinder	2 pcs

DUMP BOX HYDRAULIC SYSTEM	
When not steering, the steering hydraulic pump merges with the working hydraulic pump to improve work efficiency	
Working valve brand is Walvoil (Italy)	
Lifting cylinder	2 pcs
Dump box main valve	open type
Dump box pump	gear pump

BRAKE HYDRAULIC SYSTEM
It adopts spring brake and fully enclosed multi-disc wet brake
Integrated service brake, parking brake and emergency brake
Brake pump brand is Danfoss (Denmark)
Brake valve brand is Mico (USA)

WORKING ENVIRONMENT CONDITIONS	
Temperature	-15°C ~ +45°C
Altitude	-1500 m to + 3000 m at 25°C without rated power derate

STANDARD FEATURES
Portable fire extinguisher
Exhaust pipe insulation cotton protection
Main power switch can be locked
Emergency brake button is 1 pc in the cabin
Engine coolant tank manual pressure release cover
Front and rear chassis locking devices

OPTIONAL ENGINE	
Model	CUMMINS B7CS IV 232
Power	173kW(233Hp)@2000rpm
Max. Torque	949Nm@1200rpm
Cylinder	In Line 6
Electric	24 V
Control System	Electronic fuel injection
Cooling System	Water-cooled engine
Starter	7.8 kW motor
Emission	Stage IV (Tier 4 Final)
Air Intake	Low-profile turbocharger Dry air filtration Prefiltration
Exhaust System	DPF + SCR with urea tank

OPTIONS
Manual centralized fire suppression system
Emergency steering
Emergency brake release
Automatic centralized lubrication system
Dashcam
Closed cabin
Reversing camera system
Automatic weighing system
Driving recorder
Customize other dump box capacities

DOCUMENTS
User manual (Turkish-English)
Repair manual (Turkish-English)
Spare parts manual (Turkish-English)
Maintenance manual (Turkish-English)

Grade Performance Data

Cummins B7CS engine (3% rolling friction coefficient)				
Grade (%)	*0*	*10*	*15*	*20*
		Ratio		
Unloaded				
1st gear (km/h)	5.2	4.9	4.8	4.6
2nd gear (km/h)	10.3	9.8	9.7	9.6
3rd gear (km/h)	17.1	16.5	15.9	14.8
4th gear (km/h)	28.2	23.8		
Loaded				
1st gear (km/h)	5.1	4.9	4.7	4.4
2nd gear (km/h)	10.0	9.5	9.2	8.0
3rd gear (km/h)	16.9	16.1		
4th gear (km/h)	27.9			



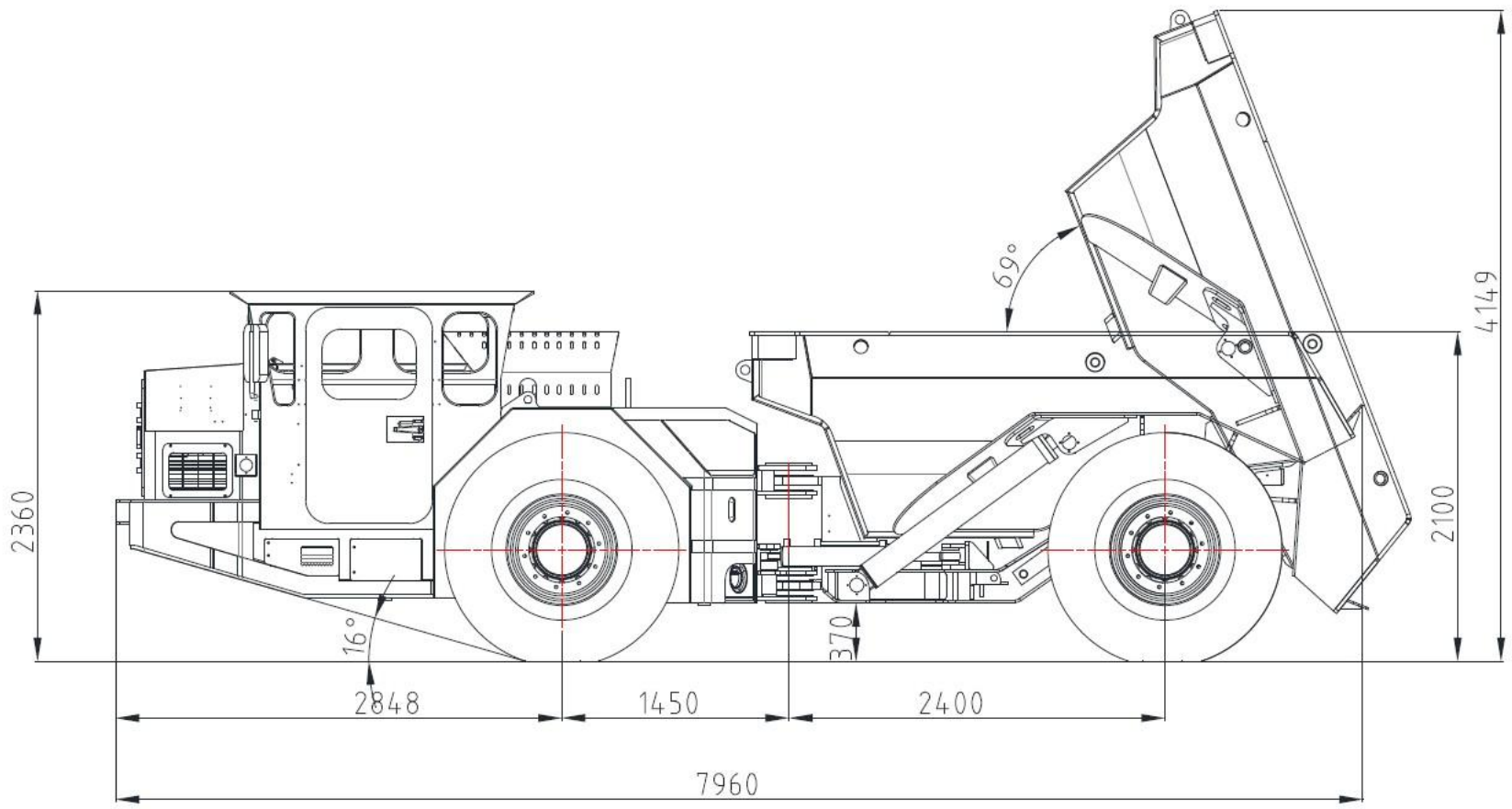
69°
4149
2100
2360
16°
370
2848
1450
2400
7960

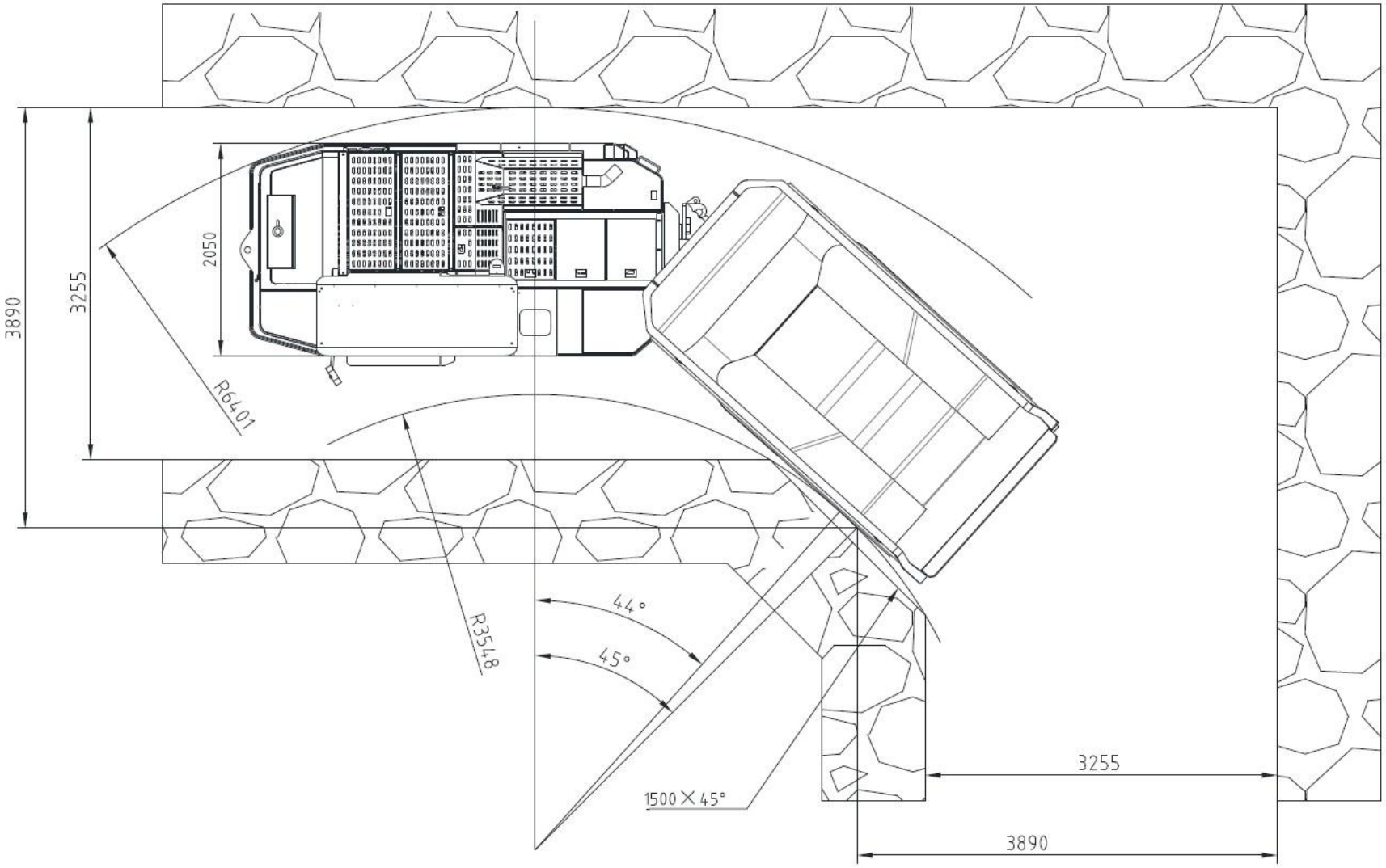
3890
3255
2050
R6401
R3548
44°
45°
1500 X 45°
3255
3890



KARER

KARER KARADAVUT ERDEM MAKİNA ENERJİ SANAYİ VE TİCARET LİMİTED ŞİRKETİ

+90 553 531 77 50 satis@karer.tr

Ostim OSB Mh. 1235. Cd. No:81 Yenimahalle / ANKARA

www.karer.tr