KARER

TECHNICAL BROCHURE

UL 4.6

4.6 M^3 BUCKET VOLUME, 10 TONS TRAMMING CAPACITY

UNDERGROUND LOADER WITH HIGH PAYLOAD CAPACITY AND ADVANCED CONTROL SYSTEM



KARER UL 4.6 highly intelligent, safe and reliable to use, has good overall machine stability, and can significantly improve mine productivity and profitability.

The loader adopts a Z-type inverted sixbar working device with strong shoveling force and an unloading height of up to 2127 mm, which can meet the loading requirements of mining trucks 40 tons and below during underground mining.

The working oil tank and the brake oil tank are separated, which effectively reduces the mutual contamination between hydraulic oils, reduces the failure rate of the whole machine, increases the life of hydraulic components, and improves the stability of the whole machine.

The optimized working mechanism can provide excellent shoveling force to meet the needs of fast shoveling and large ore processing; the powerful hydraulic system can lift the boom and tip the bucket at the same time, making shoveling more efficient.

It is equipped with a Stage V (Euro 5) VOLVO engine and meets hard emission requirements.

You have peace of mind with the high-efficiency, low-fuel consumption, easy-to-access spare parts Volvo (Sweden) brand engine.

CAPACITIES	
Standard Bucket Volume	4,6 m^3
Tramming	10.000 kg
Max Breakout Force, Lift	188.000 N
Max Breakout Force, Tilt	223.000 N
Oscillation Angle	8°

DIMENSIONS	
Length*Width*Height (cm)	980*250*238
Min. Ground Clearance	39 cm
Max Unloading Height	212 cm

MOVEMENT TIMES	
Raising	7.5 second
Lowering	4.0 second
Dumping	2.2 second

SPEEDS	
Speed (1st Gear)	5.1 km/h
Speed (2nd Gear)	10.2 km/h
Speed (3rd Gear)	17.0 km/h
Speed (4th Gear)	25.1 km/h

WEIGHTS	
Operating Weight	27,500 kg
Loaded Weight	37,500 kg
Front Axle (Unloaded)	12,500 kg
Rear Axle (Unloaded)	15,000 kg
Front Axle (Loaded)	24,500 kg
Rear Axle (Loaded)	13,000 kg

*Machine weight depends on options selected

TRANSMISSION	
Torque Converter	
Brand	DANA
Model	C5502
Gearbox	
Brand	DANA
Model	R36420
Features	Electronic shift Gear shifting operation and steering handle integrated control Four gears forward and reverse

AXLES	
Brand	Kessler (Germany)
Front Axle	Model: D102 SAHR - Limited Slip
Rear Axle	Model: D91 SAHR - Limited Slip

BRAKES
It adopts spring brake, fully enclosed multi-disc wet brake
It integrates service brake, parking brake and emergency brake
It has two independent pipeline controls, one for the front axle and the other for the rear axle
Automatic brake activation system
Brake hydraulic oil tank capacity is 80 L
Electric emergency brake release pump is standard. In case of engine stoppage, loader can be easily withdrawn from underground



ENGINE	
Model	VOLVO TAD 883 VE
Power	235kW@2200rpm
Max. Torque	1330 Nm@1200-1700rpm
Cylinder	In Line 6
Electric	24 V
Control System	Electronic fuel injection system
Cooling System	Water-cooled engine
Starter	5.5 kW motor
Emission	Stage V (Euro 5)
Air Intake	Dry air filtration Prefiltration Two-stage filtration
Exhaust System	DOC + DPF + SCR

TANK CAPASITIES	
Fuel Tank	280 liters
Working Hydraulic Oil Tank	250 liters
Brake Hydraulic Oil Tank	80 liters

ELECTRIC	
Battery	2 * 12V, 120 Ah
Starter	5.5 kW / 24 V
Dynamo	28 V, 110 A
Horn/Back-up siren is standard	
Flashing warning lights are standard	
Parking/ brake indicator light is standard	
Red and green indicator lights are 2 pcs in front rack and 2 pcs in rear rack	
Control System	Programmable
	Built-in diagnostic system
	7 ” color display
Driving Lights	
Front (at Lower Part of Upper Arm)	1 pc LED
Front (On the Upper of Arm)	4 pcs LED
Rear View	4 pcs LED
Canopy (inside)	4 pcs LED

Canopy

The cab provides an excellent ergonomic operating space, reducing operator fatigue by increasing legroom and improving pedal position.

The cab has passed ROPS/FOPS certification to protect the operator's safety. The closed cab interior is made of 25mm flame-retardant and noise-reducing interior fabric, which is not only beautiful and comfortable, but also effective in dust prevention and noise reduction.

Laminated glass windows are used and installed with four-port sealing strips. The glass can be removed inside and outside for emergency escape in dangerous situations.

The cab and frame are fixed with rubber shock absorbers to reduce the vibration of the cab.



CANOPY
ROPS certified according to ISO 3471
FOPS certified according to ISO 3449
Closed air-conditioned cab
Sound-absorbing and flame-retardant interior materials
Air conditioner and canopy are installed independently
Emergency exit
Laminated glass windows
Washable canopy floor to reduce dust
Adjustable operating handle and armrest
Three-point entry system for the cab
Main circuit breaker release button
Seating area with very good two-way visibility and comfortable use during operation

DASHBOARD
The color display 7” screen can flexibly switch between various interfaces and adjust brightness, time, download/upload programs and other operations
Display screen can display machine parameters and various alarm information, allowing the operator to understand the real-time status of the loader and operate the loader more efficiently and safely
Intelligent control system
Warning and alarm systems have sound and light prompt
Dashboard has fully functional rocker switch button control

SEAT
The driver's seat is an adjustable spring-shock-absorbing seat with a three-point safety belt
The seat can be adjusted up and down, front and back

The seat is equipped with a padded arm rest and an adjustable joystick that can be installed on the canopy door or right wall
Spring shock absorber
Height adjustable
Adjustable according to operator weight
Adjustable arm rests
Adjustable back support

WHEELS	
Tire Dimensions	18.00-R25 L-5S 32 ply

FRAME (CHASSIS)
High-strength, heavy impact and load resistant steel structure with optimized material thickness
The heavy-duty design of the rear frame can better stabilize the equipment when lifting and shoveling ore
Bucket made of high-strength, wear-resistant steel
Adopt high-strength alloy steel plate, optimize material thickness, improve overall transportation capacity, and prolong the structure life
The working mechanism boom adopts a box-type structure, which provides strong resistance to impact loads and is optimized to reduce stress and extend the service life of the boom
Work organization is reverse six-bar mechanism

HYDRAULICS
When not steering, the steering hydraulic pump merges with the working hydraulic pump to improve working efficiency
When canopy door is not locked, the loader is shut down and the axle is braked
Hydraulic oil radiator and transmission oil radiator
Lifting cylinder is 2 pcs
Tipping cylinder is 1 pc
Working main valve is load sensing multiway valve and center closed core type
Working pump is plunger variable displacement pump

STEERING
Fully hydraulic central articulated steering
Hydraulic joystick is used for steering
Steering main valve is load sensing multiway valve and center closed core type
Two double-acting steering cylinders
Steering pump is plunger variable displacement pump

WORKING ENVIRONMENT CONDITIONS	
Temp.	-15°C ~ +45°C
Altitude	When working at -1,500 meters to +3,000 meters, there is no power loss at an ambient temperature of 25℃



STANDARD FEATURES
Portable fire extinguisher
Heat source isolation protection cover
Exhaust pipe insulation cotton protection
Turbocharger guard
Cooling fan guard
Main power switch can be locked
Automatic centralized lubrication system
Emergency stop button is 2 pcs in rear rack and 1 pc in the cab
Manual pressure release cap for engine water tank
Electric emergency brake release pump
Accumulator automatic pressure relief device
Front and rear rack locking device
Arm locking device
Line-of-sight remote control system
Air conditioning and refrigeration system
Big arm suspension

OPTIONAL ENGINE	
Model	VOLVO TAD 1150VE
Power	235kW@2100rpm
Max. Torque	1581 Nm@1260rpm
Cylinder	In Line 6
Electric	24 V
Control System	Electronic fuel injection system
Cooling System	Water-cooled engine
Starter	5.5 kW motor
Emission	Euro 3
Air Intake	Dry air filtration Prefiltration Two-stage filtration
Exhaust System	DOC + POC + Silencer

OPTIONS
Remote control system
Manual centralized lubrication system
Automatic dry powder fire extinguishing
Manual dry powder fire extinguishing
Manual emergency brake release pump
Automatic trailer mechanism
Emergency steering
G.E.T. (ground engaging tools)
Driving recorder
Customize other bucket capacity
Added dozer function
Changing tires
Automatic shift series
Weighing system
Anti-collision system
Production management system
Tire pressure monitoring system
Unmanned driving system

DOCUMENTS
Machine operation manual (Turkish - English)
Machine maintenance manual (Turkish - English)
Machine spare parts manual (Turkish - English)



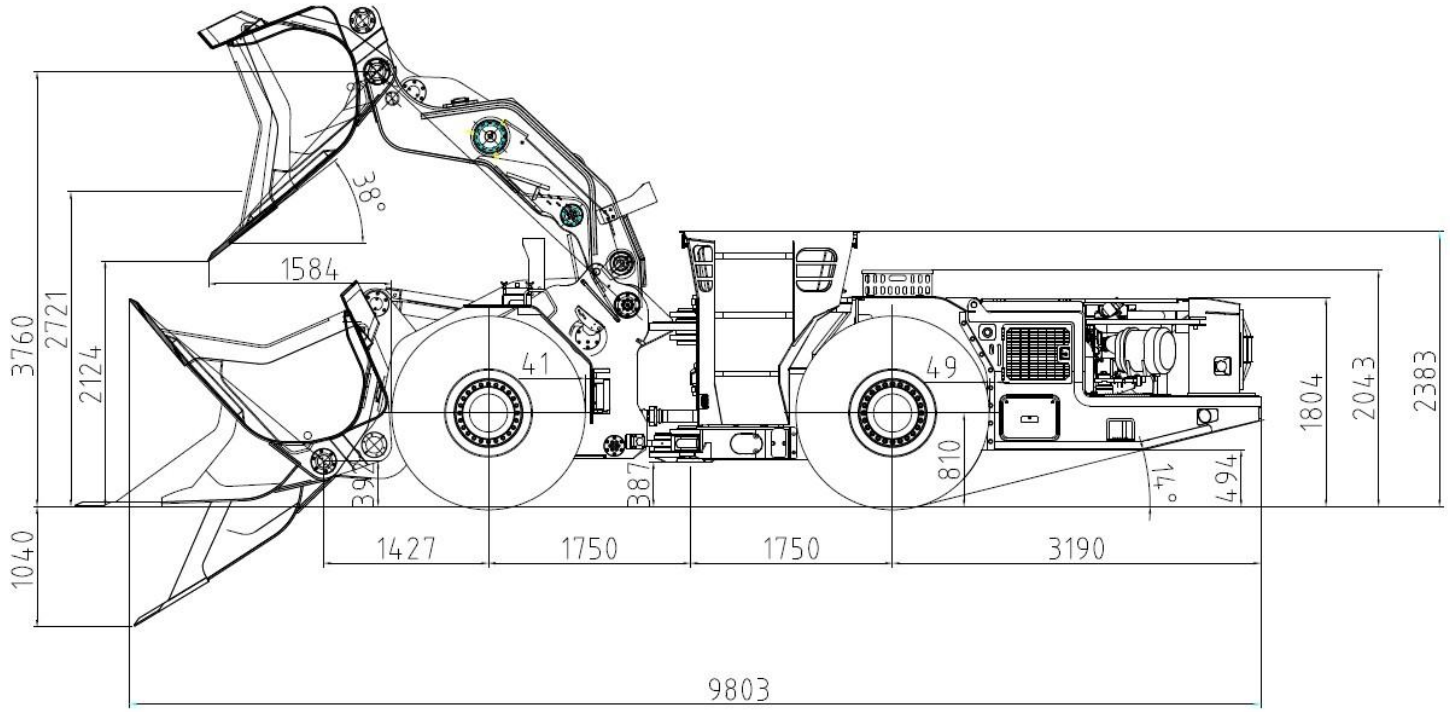
38°
1584
3760
2721
2124
1040
41
49
392
387
810
14°
494
1804
2043
2383
1427
1750
1750
3190
9803

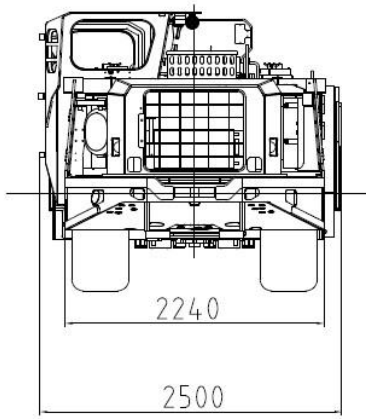
2240
2500

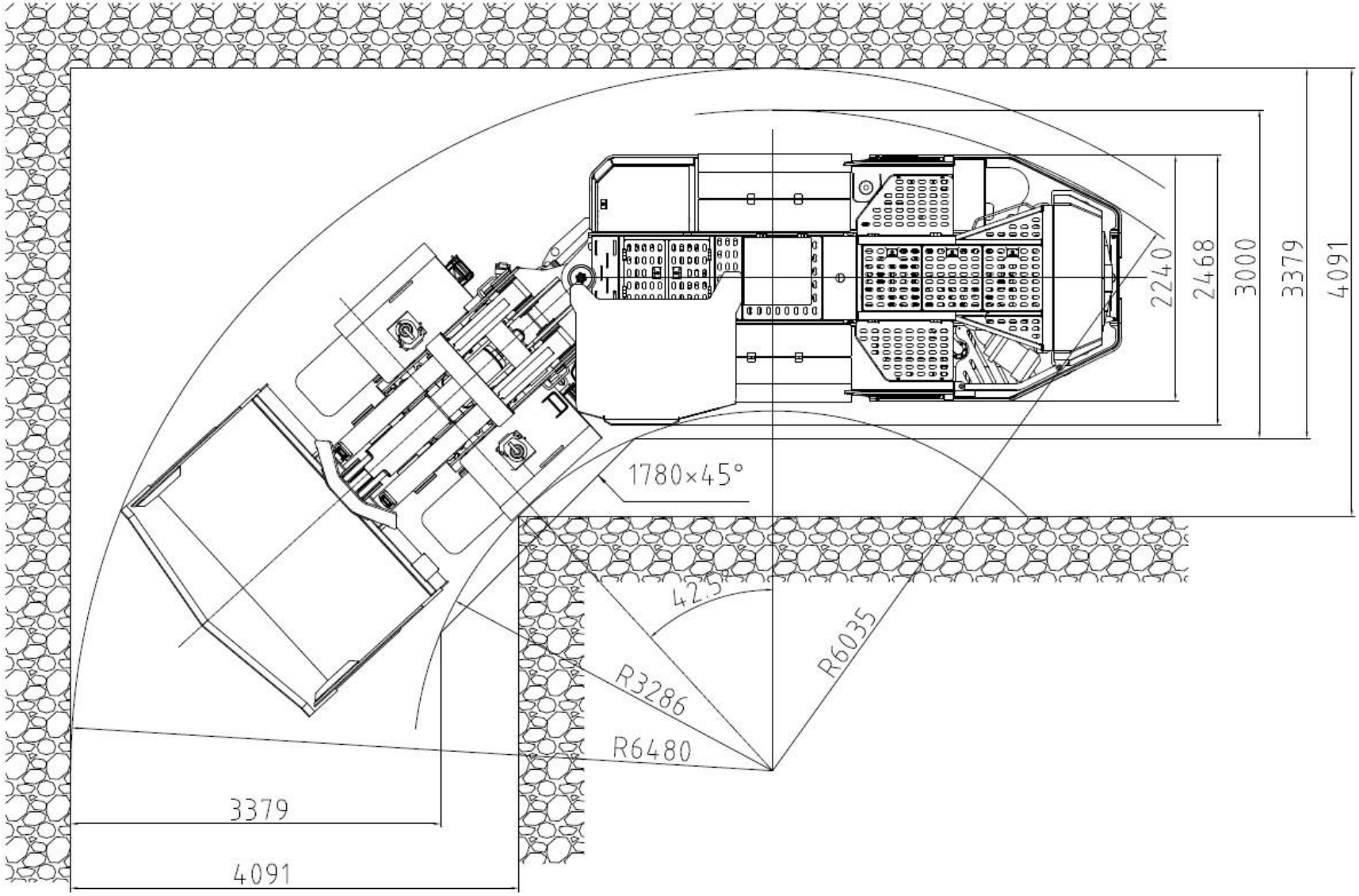
2240
2468
3000
3379
4091
1780×45°
42.5
R6035
R3286
R6480
3379
4091



KARER

KARER KARADAVUT ERDEM MAKİNA ENERJİ SANAYİ VE TİCARET LİMİTED ŞİRKETİ

+90 553 531 77 50 satis@karer.tr

Ostim OSB Mh. 1235. Cd. No:81 Yenimahalle / ANKARA

www.karer.tr