KARER

KGHM ZANAM

TECHNICAL BROCHURE

ROBUST T10

UNDERGROUND TRANSPORTATION VEHICLE

SWT ROBUST T10



**The picture is only for the offer purposes and may differ to real vehicle*

SWT **ROBUST T10** self-propelled **transport vehicle** is designed for transporting personnel and other materials in non-methane underground mines of metal ores and mineral resources. Apart from transporting the workers it can also be used as emergency vehicle for rescue teams and for delivering the tools, machinery pars, propellants or mining anchors.

Thanks to the **solid construction** with strengthen frame and body the machine has increased resistance to demanding underground applications where high performance and excellent productivity is needed. **ROPS/FOPS** approved cabin meets the requirements of challenging underground mining conditions.

Good stability and a properly selected drive and braking system enable this vehicle to be used in tunnels with **longitudinal gradients** (in the direction of travel) of **up to 15°** and with **transverse gradients of up to 8°**. It improves the working environment in terms of noise and emissions thanks to its catalytic purifier with silencer and **Euro 5 (Stage V)** emission **DEUTZ** brand engine.

It offers **the chassis, transmission, differential, and axle infrastructure** of the **Land Cruiser**, which is among the most durable off-road vehicles in the world, **adapted to the toughest terrain conditions** (mud, snow, desert), and renowned for its legendary durability.

CAPACITIES	
Personnel or Material	1+9 or 800 kg

DIMENSIONS	
Length Overall	$5{,}650^{\pm 50}$ mm
Width over cabin / rear mirrors	$2{,}080^{\pm 20}$ mm
Height (Low Profile) -tire option 1 (225/75 R16) -tire option 2 (245/75 R16) -tire option 3 (235/85 R16)	 $1{,}880^{\pm 40}$ mm $1{,}895^{\pm 40}$ mm $1{,}910^{\pm 40}$ mm
Height (High Profile) -tire option 1 (225/75 R16) -tire option 2 (245/75 R16) -tire option 3 (235/85 R16)	 $2{,}100^{\pm 40}$ mm $2{,}115^{\pm 40}$ mm $2{,}130^{\pm 40}$ mm
Ground Clearance	210 mm

DRIVING SPEEDS	
Max Front Speed	40.0 km/h
Rear Gear Speed	15.0 km/h

WEIGHTS	
Operating Weight	$2{,}900^{\pm 100}$ kg
Loaded Weight	$3{,}900^{\pm 100}$ kg
Front Axle (Unloaded)	$1{,}500^{\pm 50}$ kg
Rear Axle (Unloaded)	$1{,}400^{\pm 50}$ kg
Front Axle (Loaded)	$1{,}600^{\pm 20}$ kg
Rear Axle (Loaded)	$2{,}300^{\pm 80}$ kg

TURNING RADIUS	
Internal - Left	$5{,}100^{\pm 200}$ mm
External – Right	$7{,}600^{\pm 200}$ mm



CABIN	
Type	Welded construction Glazed ROPS/FOPS certificate
Seat	2 seats + 8 people seating area Headrest and seatbelts Toyota brand
Steering	Steering wheel
Air Conditioning	Air fan as standard
Indicators, Meters	LCD screen Mass disconnector Odometer Work hours



ENGINE	
Model	DEUTZ TCD 2.9 L4 HT
Power	55.4 kW@2,200 rpm
Max Torque	375 Nm@1,400rpm
Cylinder	In Line 4
Cooling System	Copper water radiator
Induction system	Dry filter with snorkel
Emission	Stage V (Euro 5)
Exhaust	DOC + DPF + Diffuser
Fuel Tank	90 Liters

AXLES	
Drive System	4x4 wheel drive
Brand	TOYOTA
Front Axle ✓ Differential ✓ Suspension	 Standard, wet Hydraulic
Rear Axle ✓ Differential ✓ Suspension	 Standard, wet Pneumatic

GEARBOX	
Brand	TOYOTA
Model	5-gears (front) 1-gear (rear) Mechanical

ALLOWED WORKING CONDITIONS	
Ambient Temperature	Max +55°C
Longitudinal Inclination	15°
Transverse Inclination	8°
Min. Heading's Dimensions	width 4,200 mm
	height 2,100 mm



WHEELS	
Tire Type	Tubeless
Tire Size / Model *1	225 / 75 R16
Brand / Model	BF Goodrich
	Mud Terrain T/A KM2
Rim	Steal
Spare Wheel	as standard outfit

BRAKING SYSTEM	
Type	Hydraulic
Service Brake	Dry
	Ventilated disc
Emergency - Parking Brake	SAHR (Spring App. Hyd. Released) (at rear axle)
	Electrical control



FIRE SUPPRESSION SYSTEM	
Brand	KGHM ZANAM
Fire suppression system is manually activated	
Additional manual fire extinguisher cylinder	

VISION AND MONITORING	
Cameras*2	Option
LCD Monitors*3	Option

ELECTRICAL SYSTEM	
Alternator	12 V
Batteries*4	12V 65-70Ah
	Lead-acid battery
Lighting	Road and parking lights
	LED type
Additional Lights	Position light and direction blinkers
	Flash lamps
Protection Degree	IP-56 Excluding alternator ✓ Horns ✓ Electric motors ✓ Battery disconnector
Acoustic Signals	Optical-acoustic back-up signaling device for emergency communication for people transported on the platform

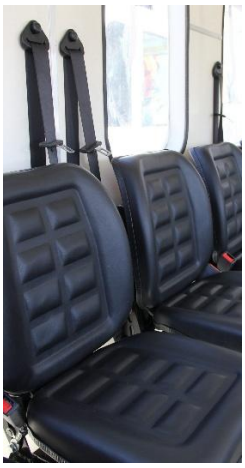

OPTIONS
***1 Tire brand / type** BF Goodrich 235/85 R16, All terrain T/A KM2, tube tire
***2 Cameras** 4 x cameras "Surround View" system, 360° vehicle vision monitoring, Bosch brand
***3 LCD Monitors** 1 x monitor in the operator's cabin, "Surround View" support
Air Conditioning
Additional equipment – on request ✓ Tow bar ✓ Wheel chocks ✓ Road signs ✓ Stands for road signs ✓ Powder extinguisher ✓ Stretcher with fixing ✓ Basket for emergency escape device

SWT ROBUST T10
Low profile version

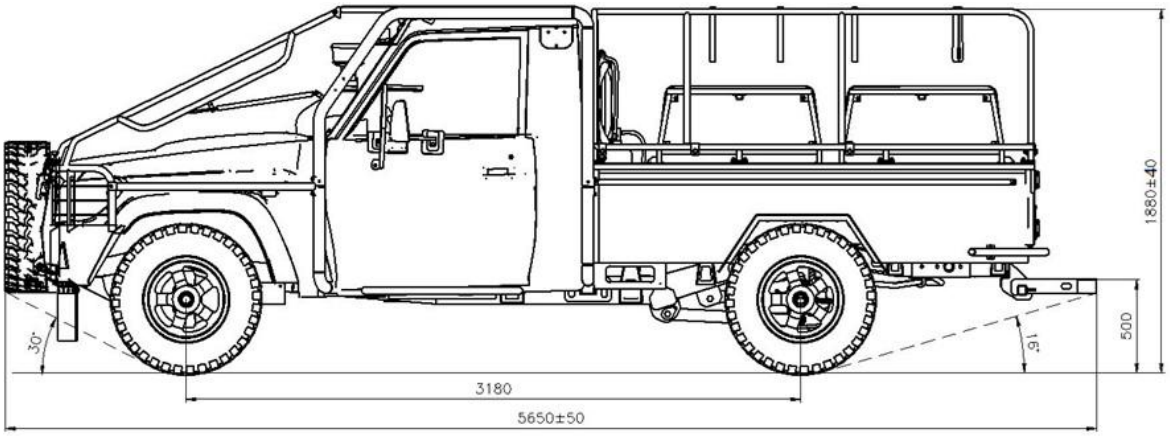

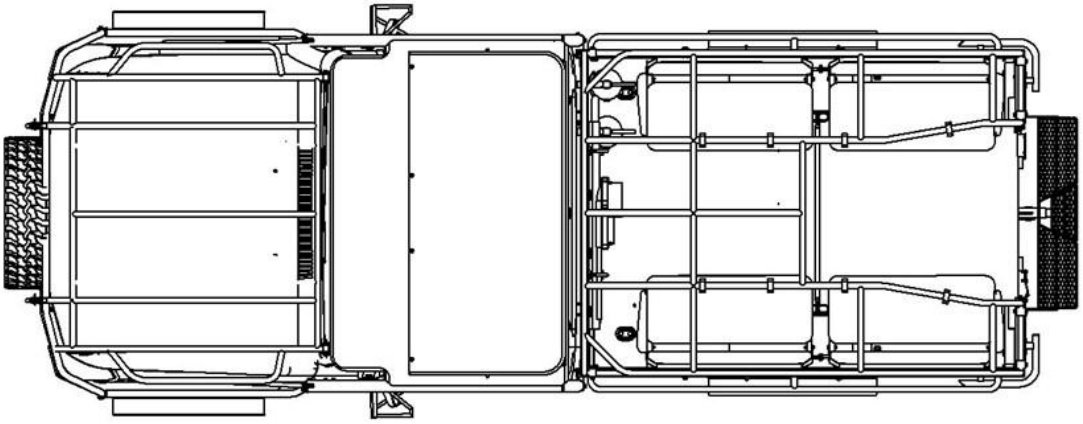

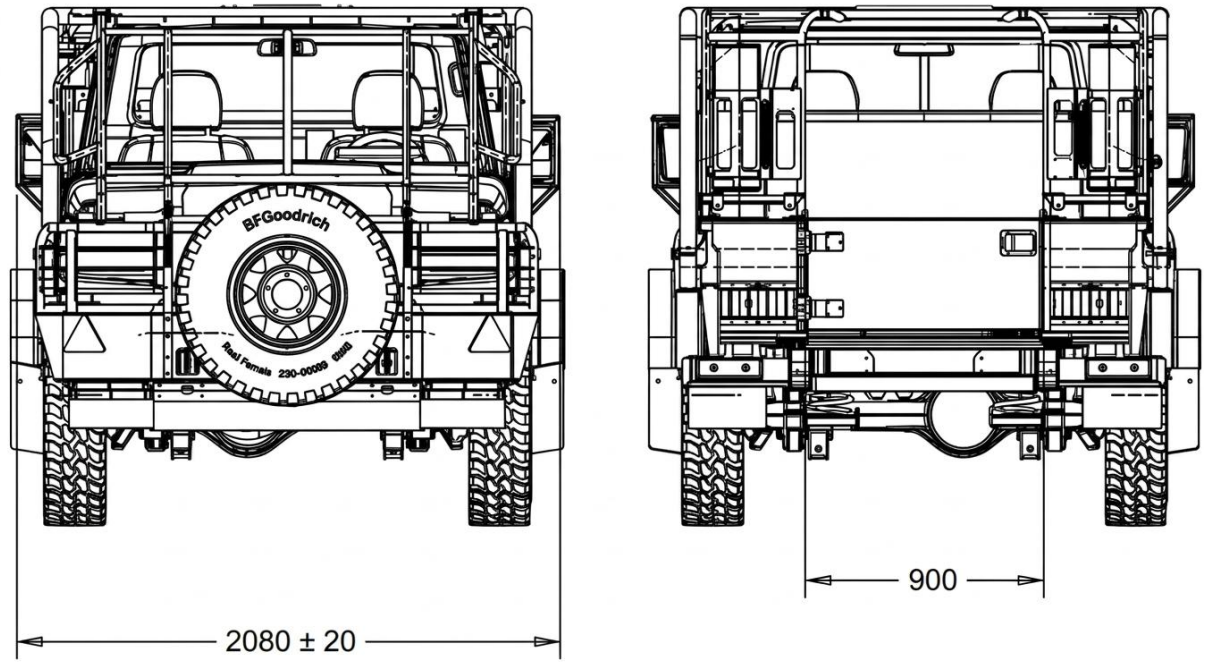

SWT ROBUST T10
High profile version

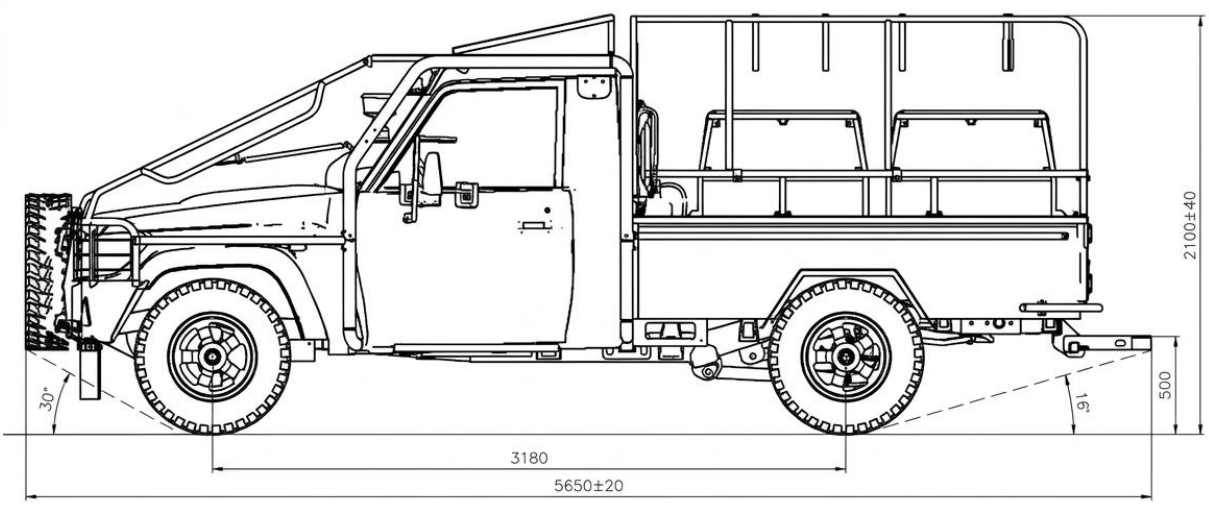

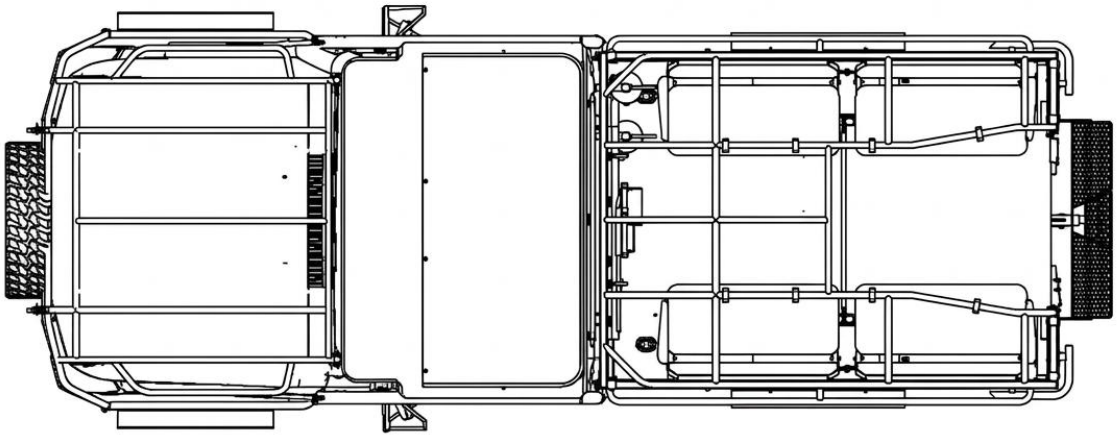

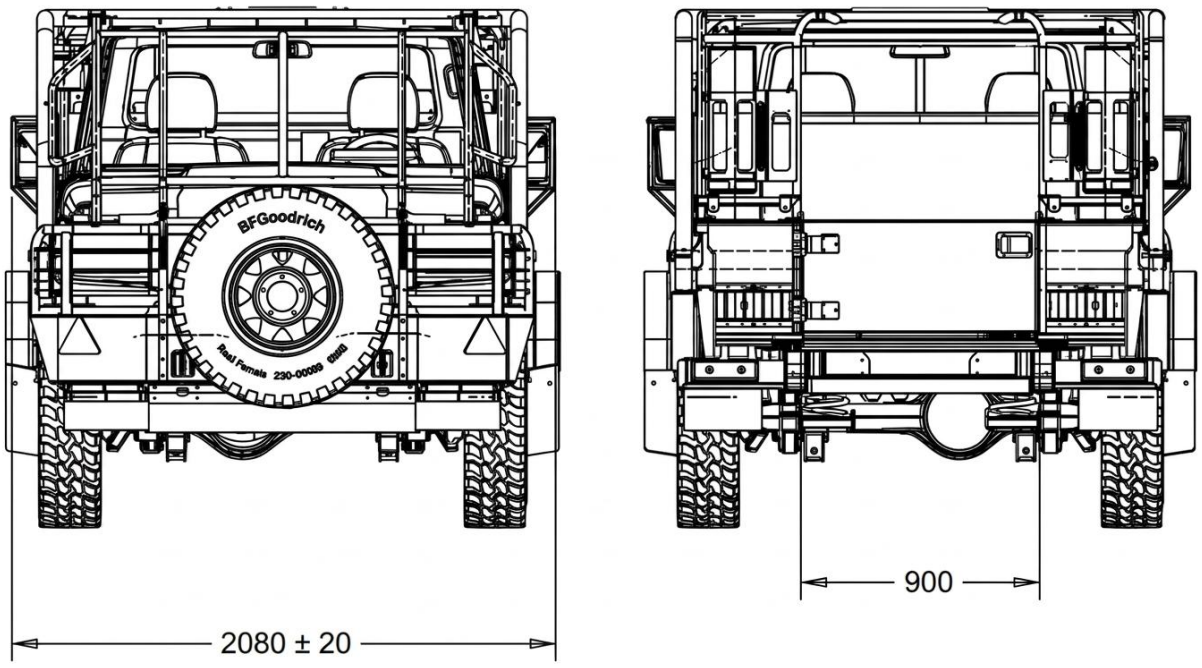

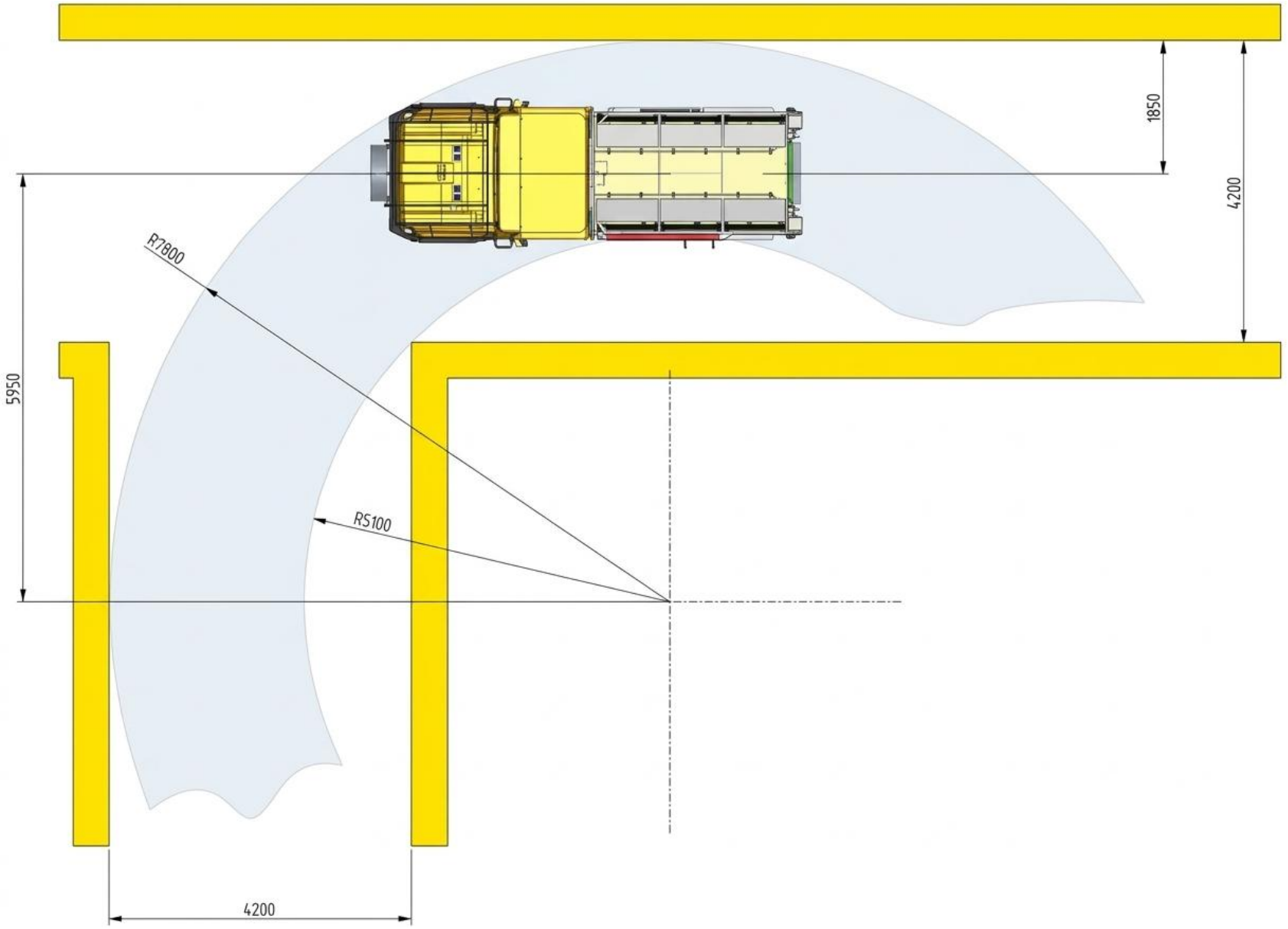
1850
4200
R7800
5950
RS100
4200



KARER

KARER KARADAVUT ERDEM MAKİNA ENERJİ SANAYİ VE TİCARET LİMİTED ŞİRKETİ

+90 553 531 77 50 satis@karer.tr

Ostim OSB Mh. 1235. Cd. No:81 Yenimahalle / ANKARA

www.karer.tr