KARER

**TECHNICAL BROCHURE**

# UL 3

## 3 $M^3$ BUCKET VOLUME, 7 TONS TRAMMING CAPACITY

## UNDERGROUND LOADER WITH HIGH PAYLOAD CAPACITY AND ADVANCED CONTROL SYSTEM



*KARER UL 3 is a loader designed for narrow lanes with a payload of 7 tons.*

*The Stage V (Euro 5) model meets stringent emission requirements with a VOLVO engine. Its fast and easy loading features offer its users the highest possible efficiency.*

*The optimized working mechanism can provide excellent shoveling force to meet the needs of fast shoveling and large ore processing; the powerful hydraulic system can lift the boom and tip the bucket at the same time, making shoveling more efficient.*

*The independent enclosed cab equipped with air-conditioning system improves the safety and comfort of the operator; it is equipped with Intelligent Control System and a 7- inch color display to display the machine's status information and fault alarm information.*

*You have peace of mind with the high-efficiency, low-fuel consumption, easy-to-access spare parts Volvo (Sweden) brand engine.*

*It improves the working environment in terms of noise and emissions thanks to its silencer, DOC + DPF + SCR + ASC and Stage V (Euro 5) Volvo brand engine.*

| CAPACITIES | |
|---|---|
| Standard Bucket Volume | 3 $m^3$ |
| Tramming | 7.000 kg |
| Max Breakout Force, Lift | 115.000 N |
| Max Breakout Force, Tilt | 167.000 N |
| Oscillation Angle | 8° |

| DIMENSIONS | |
|---|---|
| Length*Width*Height (cm) | 920*234*226 |
| Min. Ground Clearance | 28 cm |
| Max Lift Height | 493 cm |
| Max Unloading Height | 179 cm |

| MOVEMENT TIMES | |
|---|---|
| Raising | 6.7 second |
| Lowering | 3.3 second |
| Dumping | 0.9 second |

| SPEEDS | |
|---|---|
| Speed (1st Gear) | 4.4 km/h |
| Speed (2nd Gear) | 8.5 km/h |
| Speed (3rd Gear) | 16.5 km/h |
| Speed (4th Gear) | 23.2 km/h |

| WEIGHTS | |
|---|---|
| Operating Weight | 19,200 kg |
| Loaded Weight | 26,200 kg |
| Front Axle (Unloaded) | 9,400 kg |
| Rear Axle (Unloaded) | 9,800 kg |
| Front Axle (Loaded) | 20,700 kg |
| Rear Axle (Loaded) | 5,500 kg |

*Machine weight depends on options selected

| TRANSMISSION | |
|---|---|
| Torque Converter | |
| Brand | DANA |
| Model | C273 |
| Gearbox | |
| Brand | DANA |
| Model | T14 |
| Features | Electronic shift<br>Gear shifting operation and steering with integrated control<br>Four gears forward and reverse |

| AXLES | |
|---|---|
| Brand | Kessler (Germany) |
| Front Axle | Model: D91<br>SAHR Standard |
| Rear Axle | Model: D91<br>SAHR No-Spin |

| BRAKES |
|---|
| Service brake, spring-hydraulic release (SAHR), fully enclosed, multiple wet discs at each wheel end |
| Parking brake, spring-hydraulic release (SAHR), fully enclosed, multiple wet discs at each wheel end |
| Emergency brake, spring-hydraulic release (SAHR), fully enclosed, multiple wet discs at each wheel end |
| Manual emergency brake release pump is standard. In case of engine stoppage, loader can be easily withdrawn from underground |




| ENGINE | |
|---|---|
| Model | VOLVO TAD 582 VE |
| Power | 160kW@2300rpm |
| Max. Torque | 925 Nm@1380rpm |
| Cylinder | In Line 6 |
| Electric | 24 V |
| Control System | Electronic fuel injection system |
| Fuel System | Integrated hand oil pump, remote fuel filter |
| Cooling System | Water-cooled engine<br>Direct drive fan |
| Starter | 5.5 kW motor |
| Emission | Stage V (Euro 5) |
| Air Intake | Low turbocharger<br>Dry air filtration<br>Prefiltration<br>Two-stage filtration |
| Exhaust System | DOC + DPF + SCR + ASC |

| TANK CAPASITIES | |
|---|---|
| Fuel Tank | 200 liters |
| Hydraulic Oil Tank | 320 liters |

| ELECTRIC | |
|---|---|
| Battery | 2 * 12V, 100 Ah |
| Starter | 5.5 kW / 24 V |
| Dynamo | 24 V, 110 A |
| Horn/Back-up siren is standard | |
| Flashing warning lights are standard | |
| Control System | Programmable |
| | Built-in diagnostic system |
| | 7 ” color display |
| Driving Lights | |
| Front (Upper of Arm) | 3 pcs LED |
| Rear View | 2 pcs LED |
| Canopy (inside) | 3 pcs LED |



| CANOPY |
|---|
| ROPS certified according to ISO 3471 |
| FOPS certified according to ISO 3449 |
| Air conditioner |
| Sound-absorbing and flame-retardant interior materials |
| Air conditioner and canopy are installed independently |
| Emergency exit |
| Laminated glass windows |
| Washable canopy floor to reduce dust |
| Adjustable operating handle and armrest |
| Three-point entry system for the cab |
| Main circuit breaker release button |
| Seating area with very good two-way visibility and comfortable use during operation |

| DASHBOARD |
|---|
| The color display 7” screen can flexibly switch between various interfaces and adjust brightness, time, download/upload programs and other operations |
| Display screen can display vehicle parameters and various alarm information, allowing the operator to understand the real-time status of the loader and operate the loader more efficiently and safely |
| Intelligent control system |
| Warning and alarm systems have sound and light prompt |
| Dashboard is 7” color display |
| Dashboard has fully functional rocker switch button control |

| SEAT |
|---|
| The driver's seat is an adjustable spring-shock-absorbing seat with a three-point safety belt |
| The seat can be adjusted up and down, front and back |
| The seat is equipped with a padded arm rest and an adjustable joystick that can be installed on the canopy door or the right wall of the canopy |
| Spring shock absorber |
| Height adjustable |
| Adjustable according to operator weight |
| Adjustable arm rests |
| Adjustable back support |

| WHEELS | |
|---|---|
| Tire Dimensions | 17.5-R25 L-5S |

| FRAME (CHASSIS) |
|---|
| High-strength, heavy impact and load resistant steel structure with optimized material thickness |
| The heavy-duty design of the rear frame can better stabilize the equipment when lifting and shoveling ore. |
| Bucket made of high-strength, wear-resistant steel |
| Adopt high-strength alloy steel plate, optimize material thickness, improve overall transportation capacity, and prolong the structure life |

| |
|---|
| The working mechanism boom adopts a box-type structure, which provides strong resistance to impact loads and is optimized to reduce stress and extend the service life |
| Work organization is reverse six-bar |

| HYDRAULICS |
|---|
| When machine is shutdown, axles brakes |
| Working efficiency is increased with 2 radiators, namely hydraulic oil radiator and transmission oil radiator |
| Trouble-free performance with 320 liters hydraulic oil tank |
| Hydraulic pilot control |
| Lifting cylinder is 2 pcs |
| Tipping cylinder is 1 pc |
| Working main valve is middle open center |
| Working pump is gear type metering pump |

| STEERING |
|---|
| Fully hydraulic central articulated steering |
| Hydraulic joystick is used for steering |
| Hydraulic pilot control |
| Steering main valve is middle open center |
| Steering hydraulic cylinder is 2 pcs |
| Steering pump is gear type metering pump |

| WORKING ENVIRONMENT CONDITIONS | |
|---|---|
| Temp. | -15°C ~ +45°C |
| Altitude | When working at -1,500 meters to +2,500 meters, there is no power loss at an ambient temperature of 25°C |

| STANDARD FEATURES |
|---|
| Portable fire extinguisher |
| Heat source isolation protection cover |
| Exhaust pipe insulation cotton protection |
| Turbocharger guard |
| Main power switch can be locked |
| Emergency stop button |
| Manual pressure release cap for engine water tank |
| Manual pressure relief device for accumulator |
| Front and rear rack locking device |
| Arm locking device |

| OPTIONAL ENGINE | |
|---|---|
| Model | VOLVO TAD850 VE |
| Power | 160kW@2200rpm |
| Max. Torque | 1060 Nm@1350rpm |
| Cylinder | In Line 6 |
| Electric | 24 V |
| Control System | Electronic fuel injection system |
| Fuel System | Integrated hand oil pump, remote fuel filter |
| Cooling System | Water-cooled engine Direct drive fan |
| Starter | 5.5 kW motor |
| Emission | Euro 3 |
| Air Intake | Low turbocharger Dry air filtration Prefiltration Two-stage filtration |
| Exhaust System | Catalytic Purifier + Silencer |





| OPTIONS |
|---|
| Remote control system |
| Engine fire extinguishing system |
| Manual centralized lubrication system |
| Automatic centralized lubrication system |
| Automatic dry powder fire extinguishing |
| Manual dry powder fire extinguishing |
| Electric emergency brake release pump |
| Line-of-sight remote control system |
| G.E.T. (ground engaging tools) |
| Driving recorder |
| Customize other bucket capacity |
| Automatic shift series |
| Anti-collision system |
| Production management system |



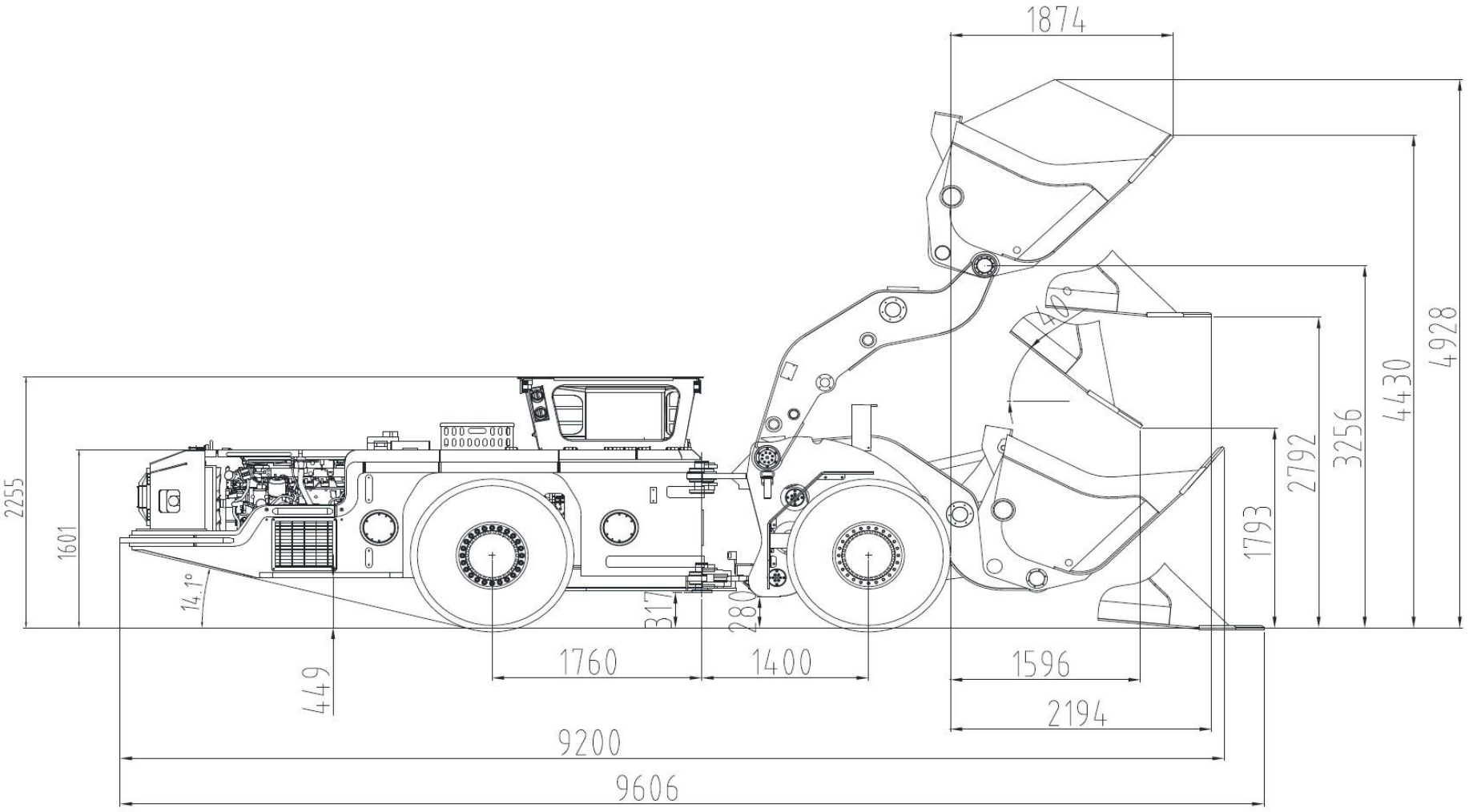
1874
4928
4430
3256
2792
1793
2255
1601
14.1°
317
280
1760
1400
1596
2194
449
9200
9606

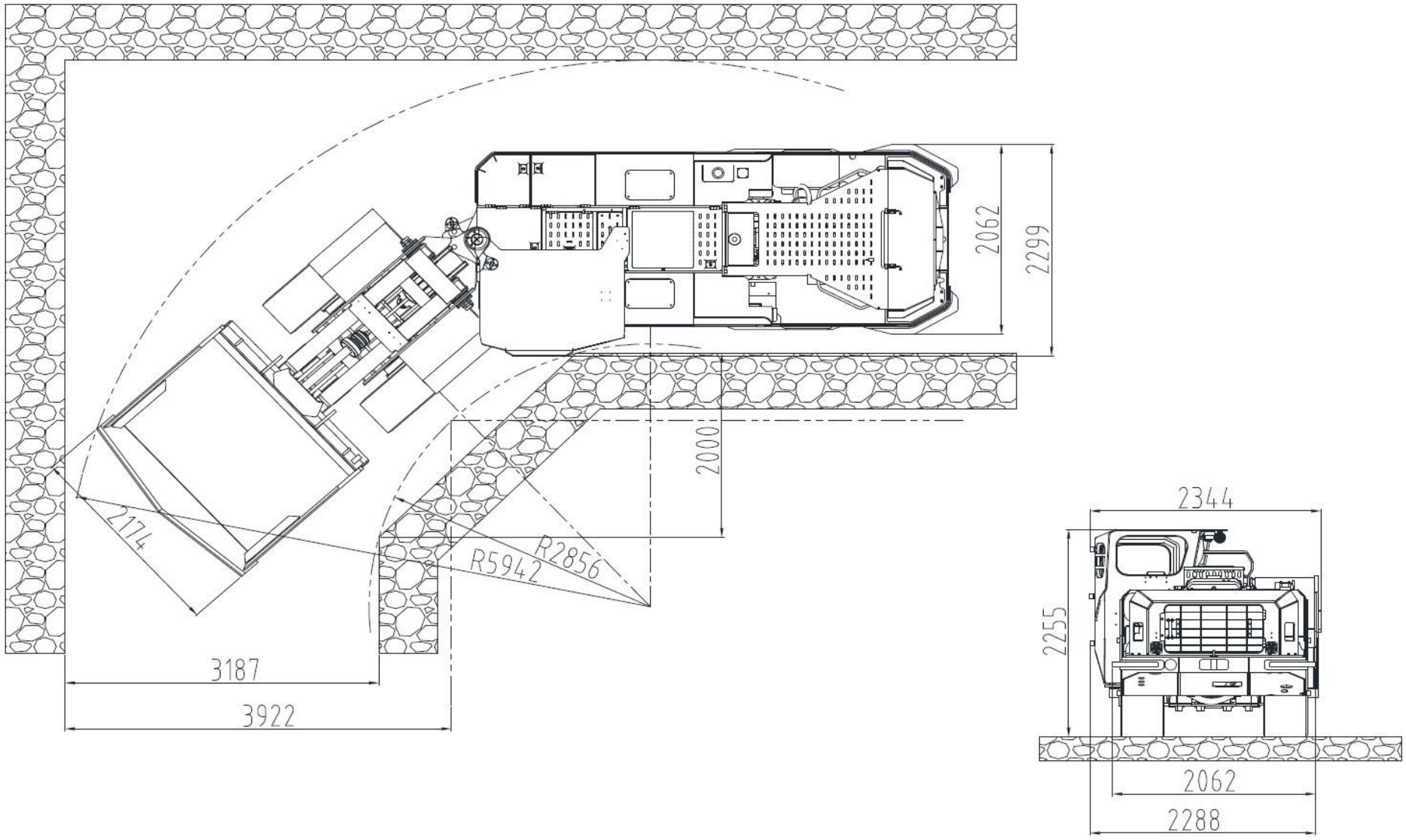
2062
2299
2000
2174
R5942
R2856
3187
3922
2344
2255
2062
2288



KARER

KARER KARADAVUT ERDEM MAKİNA ENERJİ SANAYİ VE TİCARET LİMİTED ŞİRKETİ

+90 553 531 77 50 satis@karer.tr

Ostim OSB Mh. 1235. Cd. No:81 Yenimahalle / ANKARA

www.karer.tr