TECHNICAL BROCHURE

UL 2C

2 M³ BUCKET VOLUME, 4 TONS TRAMMING CAPACITY

UNDERGROUND LOADER SUITABLE FOR WORKING IN NARROW VEINS



KARER UL 2C is a highly compact and lightweight underground loader (LHD) for narrow gallery underground mining operations.

Its fast and easy loading features offer users the highest possible efficiency.

KARER UL 2C provides operators with excellent visibility. The operator can easily see in all directions.

Thanks to the oscillation area being located in the center of the machine instead of the rear axle, it provides the operator with safer operation. The higher oscillation point compared to its competitors ensures that the oscillation point is less exposed to water and moisture, and this area lasts longer.

The loader is easy to use and maintain. All maintenance points are well protected and easily accessible.

You can rest assured with the highly efficient, low fuel consumption DEUTZ (Germany) engine with easily accessible spare parts.

CAPACITIES	
Bucket Volume	2 m^3
Tramming	4,000 kg
Max Breakout Force, Lift	85,000 N
Max Breakout Force, Tilt	104,000 N
Oscillation	8°

DIMENSIONS	
Length*Width*Height (cm)	731*160*213
Min. Ground Clearance	46 cm
Max Lift Height	355 cm
Max Unloading Height	142 cm

MOVEMENT TIMES	
Raising	6.3 second
Lowering	4.0 second
Dumping	3.6 second

SPEEDS	
Speed (1st Gear)	4.4 km/h
Speed (2nd Gear)	16.0 km/h
Speed (3rd Gear)	25.0 km/h

WEIGHTS	
Operating Weight	11,520 kg
Loaded Weight	15,520 kg
Front Axle (Unloaded)	5,040 kg
Rear Axle (Unloaded)	6,480 kg
Front Axle (Loaded)	11,400 kg
Rear Axle (Loaded)	4,120 kg

* Machine weight may vary depending on options

TRANSMISSION	
Type	Modulated transmission gearbox
Torque Converter	
Model	C272
Transmission	
Model	32421

AXLES	
Brand	KARER
Front Axle	Locked - SAHR
Rear Axle	Standard - SAHR

BRAKES
Service brake, spring-hydraulic release (SAHR), fully enclosed, multiple wet discs at each wheel end
Parking brake, spring-hydraulic release (SAHR), fully enclosed, multiple wet discs at each wheel end
Emergency brake, spring-hydraulic release (SAHR), fully enclosed, multiple wet discs at each wheel end
Manual emergency brake release pump is standard. In case of diesel engine failure, loader can be easily withdrawn from tunnel

ENGINE	
Model	DEUTZ BF4M1013FC
Type	Water Cooled
Power	118kW (158 HP) @2300rpm
Max. Tork	700Nm@1400rpm
Cylinder	In Line 4
Electric	24 V
Emission	Stage II (Euro 2)
Air Intake	Low Position Turbocharger and Dry Type Air Filter (pre-filter) + Return and Intake Filtration
Exhaust System	Silencer + Catalytic Converter

TANK CAPASITIES	
Fuel Tank	170 liters
Hydraulic Oil Tank	150 liters

ELECTRIC	
Battery	1 * 165 / 180 AH
Starter	4 kW / 24 V
Horn/Reverse siren is standard	
Flashing warning lights are standard	
Driving Lights	
Front View (Canopy Top)	2 pcs LED
Front (on the boom)	2 pcs LED
Rear View	2 pcs LED

CANOPY
Washable canopy floor to reduce dust
Ergonomic suspension seat and armrest
Seating area with very good two-way visibility and comfortable use during work

DASHBOARD
The dashboard can display vehicle parameters and various alarm information, so that the operator can understand the real-time status of the loader, operate the loader more efficiently and safely
Warning and alarm systems have audible and light warnings

WHEELS	
Tires	12.00 R24 L-5 / L-5S

FRAME (CHASSIS)
High strength, heavy impact and load resistant steel structure with optimized material thickness
Heavy-duty design of the rear frame better secures the loader when lifting and shoveling ore
Bucket made of high strength, wear-resistant steel
Improved boom and load frame geometry to optimize performance
Seating area that provides a very good two-way view and comfortable use during work
Bolted and welded tanks

HYDRAULICS
When the loader stops, the axles are braked as standard
WALVOIL (Italy) brand high quality control joystick
WALVOIL (Italy) brand high quality control valves
Hydraulic oil cooler
BOSCH REXROTH (Germany) or Hytek brand heavy-duty gear pump
Two double acting cylinders with center point joint
Lifting boom system has two cylinders
Dumping boom system has one cylinder
Joystick controlled bucket and boom movements
Release brakes with hand pump
Oil level indicator

STEERING
Joystick is equipped with gear pump that supplies oil to bucket hydraulic main valve
Steering main valve is center open center type
CASAPPA (Italy) brand hydraulic pump is used for steering
Heavy-duty gear pumps from BOSCH REXROTH (Germany) or Hytek are used for boom and bucket control

WORKING ENVIRONMENT CONDITIONS	
Temperature	-15°C ~ +45°C
Altitude	When working at -1,500~+3,000 meters, there is no loss of motor power when the temperature is not higher than 25℃

OPTIONS
Remote control system from line of sight
Automatic dry powder fire extinguishing system
Automatic central lubrication system
Push plate (bucket)
Production management system

OPTIONAL ENGINE (EURO 5, STAGE V)	
Model	DEUTZ TCD 4.1 L4
Type	Turbocharged and Water-Cooled
Power	115kW@2300rpm
Max. Torque	609Nm@1600rpm
Cylinder	In Line 4
Electrical	24 V
Emission	Stage V (Euro 5)
Air Intake	Low Position Turbocharger and Dry Type Air Filter (pre-filter) + Return and Intake Filtration
Exhaust System	Silencer + Diesel Oxidation Catalyst (DOC) + Diesel Particulate Filter (DPF) + Selective Catalytic Reduction (SCR) + Exhaust Gas Purification

www.karer.tr Ostim OSB Mh. 1235. Sk. N0:81 Yenimahalle / Ankara +90 553 531 77 50

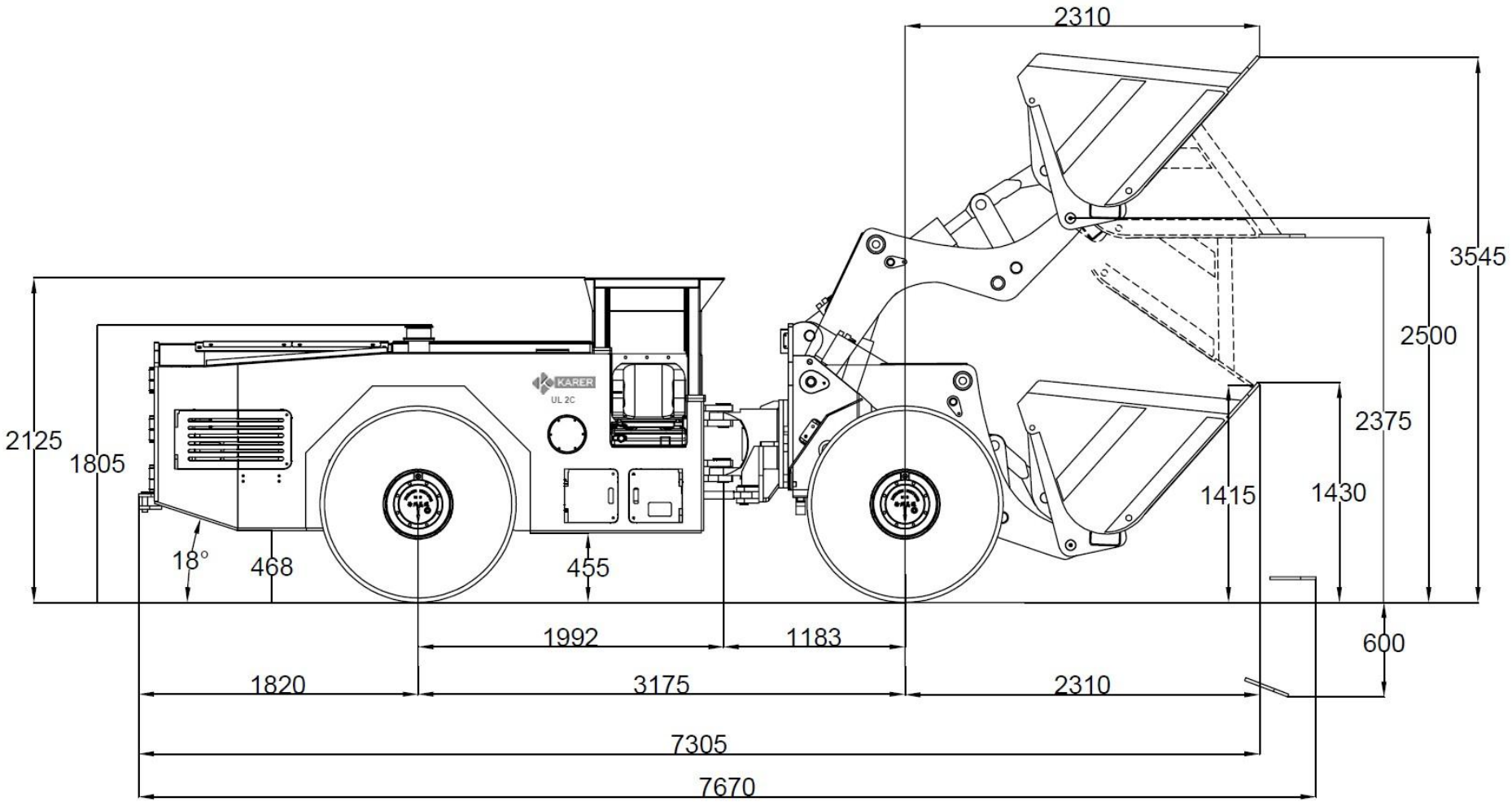
2310
3545
2500
2375
1430
1415
2125
1805
18°
468
455
1992
1183
600
1820
3175
2310
7305
7670
KARER
UL 2C

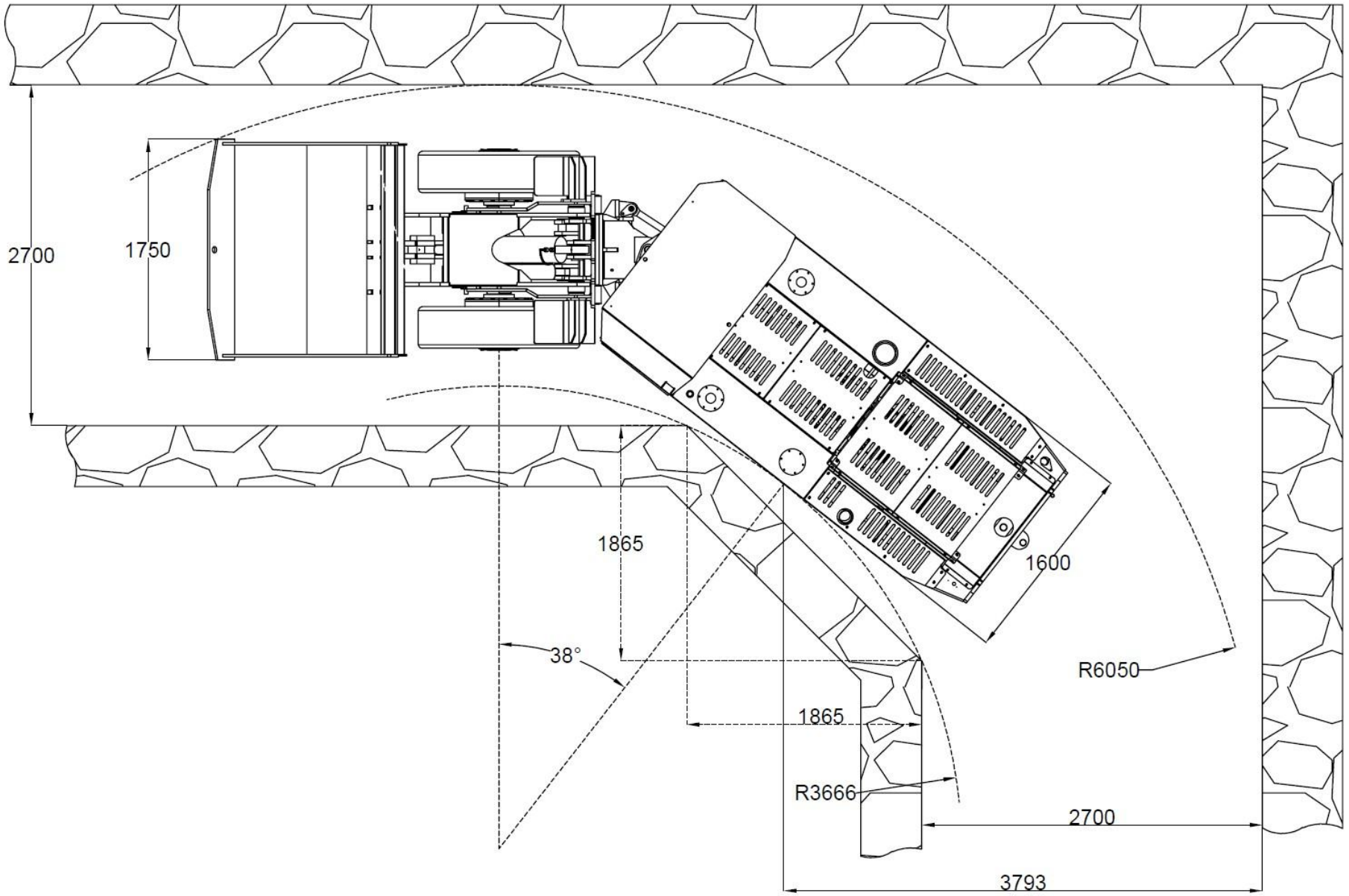
2700
1750
1865
1600
38°
R6050
1865
R3666
2700
3793



KARER

KARER KARADAVUT ERDEM MAKİNA ENERJİ SANAYİ VE TİCARET LİMİTED ŞİRKETİ

+90 553 531 77 50 satis@karer.tr

Ostim OSB Mh. 1235. Cd. No:81 Yenimahalle / ANKARA

www.karer.tr