TECHNICAL BROCHURE

UL 1C

UNDERGROUND LOADER WITH 1 M^3 BUCKET, 2 TONS TRAMMING CAPACITY

SUITABLE FOR WORKING IN NARROW VEINS



KARER UL 1C is a very compact and lightweight underground loader (LHD) for narrow-vein underground mining operations.

Its fast and easy loading features offer its users the highest possible efficiency.

KARER UL 1C offers operators very good visibility and safe use. It has fast and safe maneuverability in narrow areas.

The loader is easy to use and maintain. All maintenance points are very well protected and easily accessible.

You have peace of mind with the DEUTZ brand engine with high efficiency, low fuel consumption and easy access to spare parts.

It improves the working environment in terms of noise and emissions thanks to its catalytic purifier with silencer and DEUTZ brand engine.

CAPACITIES	
Bucket Volume	1 m^3
Tramming	2,000 kg
Max Breakout Force, Lift	45,000 N
Max Breakout Force, Tilt	50,000 N
Oscillation Angle	8°

DIMENSIONS	
Length*Width*Height (cm)	542*127*189
Min. Ground Clearance	27 cm
Max Lift Height	322 cm
Max Unloading Height	139 cm

MOVEMENT TIMES	
Raising	3.8 sec
Lowering	1.9 sec
Dumping	2.5 sec
Speed-1 (High Torque Mode)	5.1 km/h
Speed-2 (High Speed Mode)	13.5 km/h

WEIGHTS	
Operating Weight	6,750 kg
Loaded Weight	8,750 kg
Front Axle (Unloaded)	2,400 kg
Rear Axle (Unloaded)	4,350 kg
Front Axle (Loaded)	5,590 kg
Rear Axle (Loaded)	3,160 kg

* Weight may vary depending on options

TRANSMISSION	
Type	Hydrostatic
Pump	BOSCH REXROTH
Motor	BOSCH REXROTH

AXLES	
Brand	KARER
Front Axle	Locked
Rear Axle	Standard

BRAKES
The service (working) brake is provided via the hydrostatic transfer case.
The parking brake is connected to the transfer case via a hydraulic lever.
The emergency brake is located on the hydrostatic transfer case.

ENGINE	
Model	DEUTZ D914L04
Type	Air-Cooling
Power	58kW (78 HP) @2300rpm
Cylinder	In Line 4
Electric	12 V
Emission	Stage II
Air Filter	Oil Bath Air Filter
Exhaust	Catalytic Purifier with Silencer

TANK CAPACITIES	
Fuel Tank	60 liters
Hydraulic Oil Tank	160 liters

TRANSFER CASE	
Type	Gear
Location	At Rear Chassis

ELECTRIC	
Battery	1 * 90 AH
Starter	4 kW / 12 V
Lights	
Front (At top of Canopy)	2 pcs LED
Front (Boom Connection Point Top)	1 pcs LED
Rear	2 pcs LED

CANOPY
Washable canopy floor to reduce dust
Armrest
Seating area with very good two-way visibility and comfortable use during work

DASHBOARD
The dashboard can display vehicle parameters and various alarm information, so that the operator can understand the real-time status of the loader, operate the loader more efficiently and safely
Warning and alarm systems have audible and light warnings.

WHEELS	
Tires	9.00-R20 L5 or 10.00-R20 L5-S

www.karer.tr Ostim OSB Mh. 1235. Sk. N0:81 Yenimahalle / Ankara +90 553 531 77 50

FRAME (CHASSIS)
Seating area that provides a very good two-way view and comfortable use during work
Improved boom and load frame geometry to optimize performance
High strength, heavy impact and load resistant steel structure with optimized material thicknesses
Water washable floor to reduce dust
Bolted and welded tanks
Bucket made of high strength, wear-resistant steel

HYDRAULIC
WALVOIL brand high-quality joystick
WALVOIL brand high-quality control valves
Hydraulic oil cooler
One double acting cylinder with center point joint
The lifting boom system has one cylinder
The lowering boom system has one cylinder.
Steering controlled by hydraulic joystick
Bucket and boom movements connected to CASAPPA (Italy) pump controlled by joystick
Oil level indicator
The lifting boom system has one cylinder
Because of releasing the brakes with the hand pump, loader can be easily taken out



STEERING
Bucket and boom control is provided by the joystick, which provides ease of use to the operator.
The joystick is equipped with a gear pump that supplies oil to the bucket hydraulic main valve.
Hydraulic joystick is used for steering.
CASAPPA brand hydraulic pump for steering.
Heavy-duty CASAPPA brand gear pump from is used for boom and bucket control.



WORKING CONDITIONS	
Temperature	-15°C ~ +45°C
Altitude	No power loss at 25℃ ambient temperature when operating between -1,500 meters and +3,000 meters

OPTIONS
Remote control system
Production management system



OPTIONAL ENGINE (EURO 5, STAGE V)	
Model	DEUTZ TD 3.6 L4
Type	Water Cooled, Exhaust Gas Recirculation
Power	55,4kW@2600rpm
Cylinder	In Line 4
Electric	12 V
Emission	Euro 5 (Stage V)
Air Filter	Diesel Particulate Filter

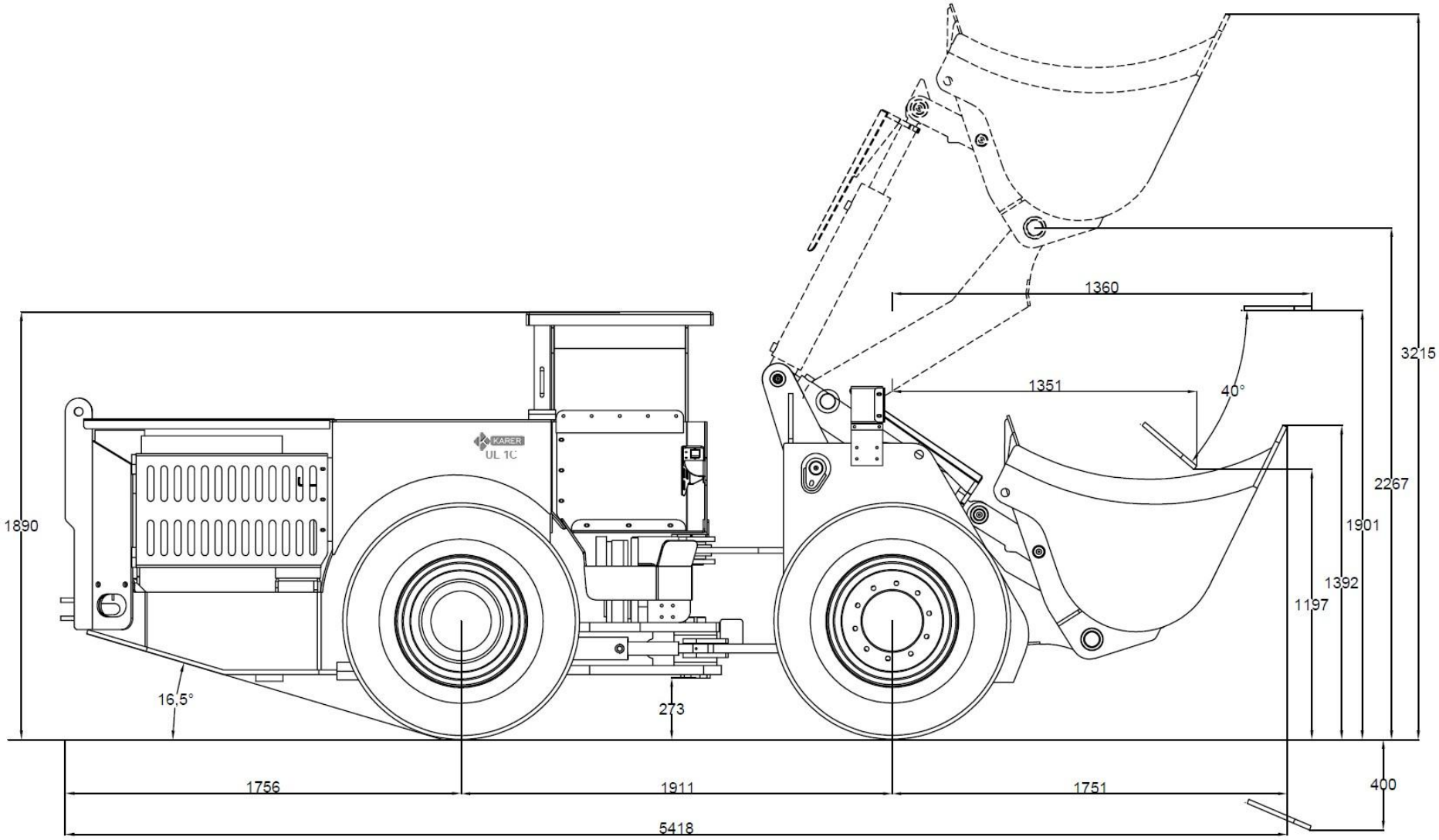
KARER
UL 1C
1890
16,5°
273
1360
1351
40°
3215
2267
1901
1392
1197
1756
1911
1751
400
5418

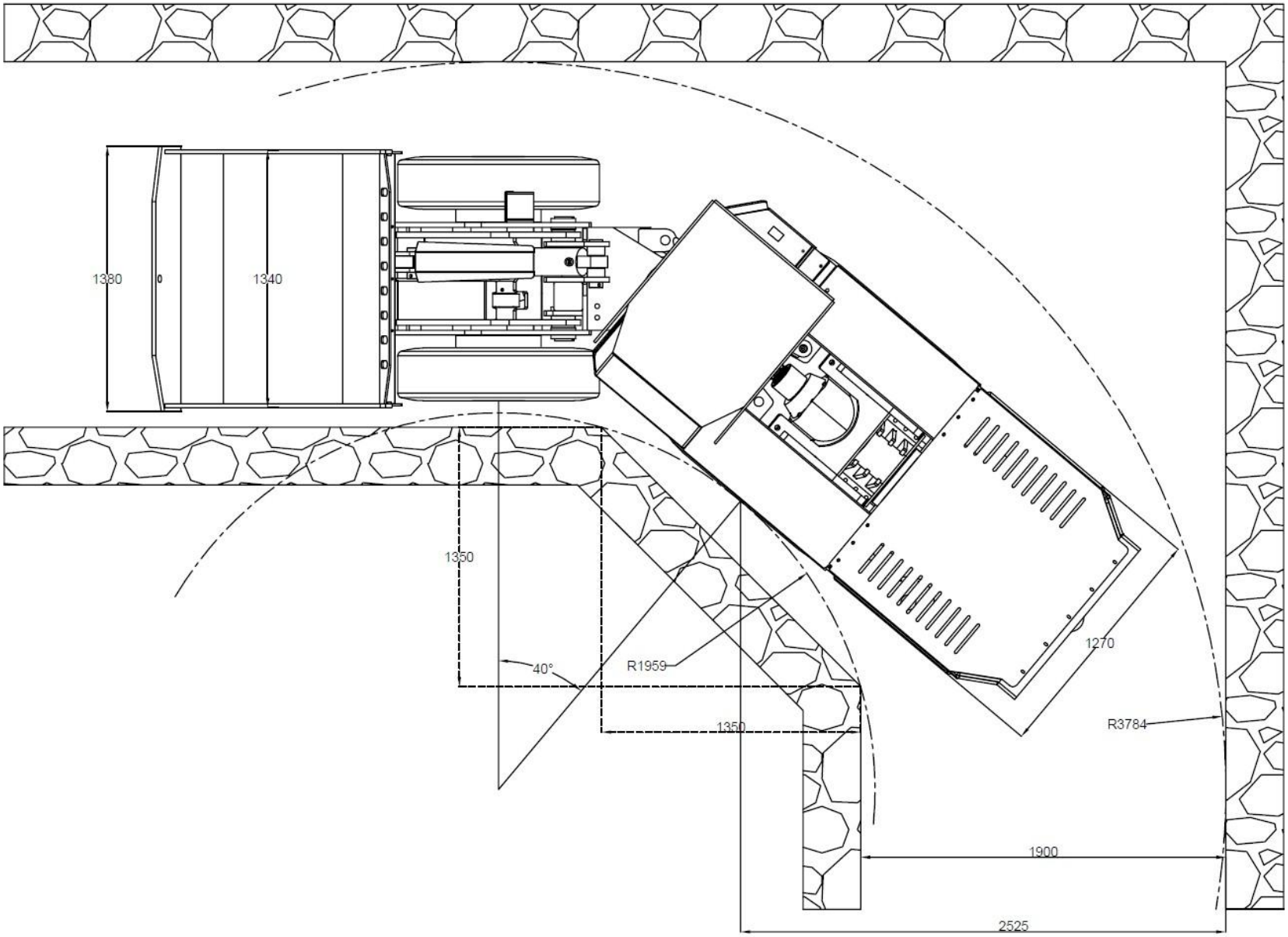
1380
1340
1350
40°
R1959
1350
1270
R3784
1900
2525



KARER

KARER KARADAVUT ERDEM MAKİNA ENERJİ SANAYİ VE TİCARET LİMİTED ŞİRKETİ

+90 553 531 77 50 satis@karer.tr

Ostim OSB Mh. 1235. Cd. No:81 Yenimahalle / ANKARA

www.karer.tr